MINISTRY OF EDUCATION AND SCIENCE OF UKRAINE

O. M. BEKETOV NATIONAL UNIVERSITY
of URBAN ECONOMY in KHARKIV

METHODOLOGICAL GUIDELINES
for practical classes,
self-dependent and calculator- graphical works
on the subject

"STRENGTH of MATERIALS"

("CALCULATION OF STABILITY COMPRESSED RODS")

(*for the* 2-*nd year full-time students specialty*
192 – Construction and civil engineering)

Kharkiv
O. M. Beketov NUUE
2021

Methodological Guidelines for practical classes, self-dependent and calculator-graphical works on the subject “Strength of Materials” (“Calculation of stability compressed rods”) (for the 2-nd year full-time students of the specialty 192 – Construction and civil engineering) / O. M. Beketov National University of Urban Economy in Kharkiv ; com. N. V. Sereda, A. O. Garbuz, A. A. Chuprunin. – Kharkiv : O. M. Beketov NUUE, 2021. – 17 p.

Compiler N. V. Sereda
A. O. Garbuz
A. A. Chuprunin

Reviewer Ph. D. in Philosophy V. A. Sklyarov

Recommended by the department theoretical and structural mechanics,
record № 8 on 06.03.2021.

CONTENTS

1 LATERAL BENDING

In engineering calculation, it is necessary to ensure realization the conditions of strength, rigidity and stability. According to the condition of strength, the actual stresses in any place of the structure should not exceed certain allowable values. The condition of rigidity requires such relations between external loading and the sizes of a design at which deformations not exceed the allowable. These conditions are sometimes added to the condition of stability, which provides of the original form of equilibrium of the structure or its separate elements under a given load. Stability problems (the problem of lateral bending) occur primarily for long compressed rods.

STABLE AND UNSTABLE ELASTIC EQUILIBRIUM

The behavior of an ideal column compressed by an axial load *F:*

If $F < F_{cr}$, the column is in ***stable equilibrium*** in the straight position.

If $F = F_{cr}$, the column is in ***neutral equilibrium*** in either the straight or a slightly bent position.

If $F > F_{cr}$, the column is in ***unstable equilibrium*** in the straight position and will buckle under the slightest disturbance.

The **critical load** $\boldsymbol{F_{cr}}$ is the transition between the *stable* and *unstable* conditions occurs at a special value of the axial force.

For safe shape conditions of compressed rods it is necessary the compressive load was less than the critical force:

$$F_{\max} = \frac{F_{cr}}{k_{st}}, \tag{1}$$

where k_{st} is the *coefficient of stability*, which is always **> *1***.

2 BUCKLED SHAPES FOR AN IDEAL COLUMN WITH PINNED ENDS

Euler buckling

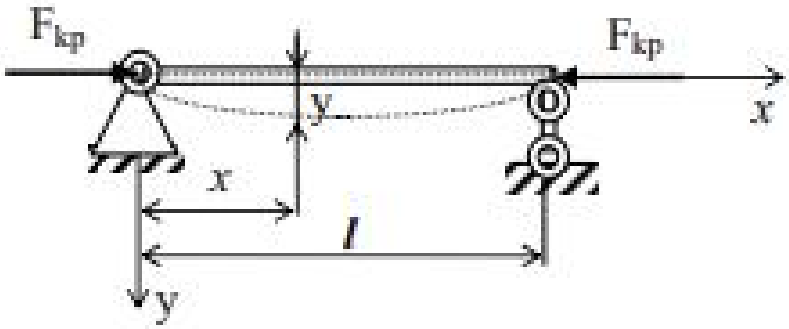

To determine the *critical loads* and corresponding deflected shapes for an ideal pin-ended rod. It assumed that the stresses from a critical force do not exceed the *limit of proportionality* ($\sigma_{cr} \le \sigma_{pr}$). In this case, the state of equilibrium of the rod is neutral, i. e. the curved shape of the rod is balanced. Consider the state of the rod with a curved axis, but consider the deviation from the straight shape insignificant. Then the differential equation of the axis of the rod has the form

$$EI_{\min}\frac{d^2y}{dx^2} = M(x),$$

where $M(x) = -F_{cr} \cdot y$ is the bending moment at any cross section, y is the lateral deflection in the *vertical* direction; and ***EI*** is the flexural rigidity for bending in the ***xy*** plane.

Following

$$\frac{d^2y}{dx^2} + \frac{F_{cr}}{EI_{\min}}y = 0.$$

Denoted

$$k^2 = \frac{F_{cr}}{EI_{\min}}$$

Using this notation, we can rewrite $$\frac{d^2y}{dx^2} + k^2y = 0.$$

From mathematics, we know that the **general solution** of this equation is

$$y = A\cos kx + B\sin kx,$$

in which A and B are *constants of integration* (to be evaluated from the boundary conditions, or end conditions, of the column).

The *boundary conditions*:

1) $y = 0$, if $x = 0$;

2) $y = 0$, if $x = l$.

From the first we get $A = 0$, from second – sin $kl = 0$, where $\boldsymbol{kl} = n\pi$ ($n = 1, 2, 3,..$)

The values of F_{cr} are the **critical loads** for this column:

$$F_{cr} = \frac{n^2 \pi^2 EI_{\min}}{l^2} \qquad n = 1, 2, 3, \ldots$$ – **Euler** formula.

In the calculations for stability of practical is the lowest ***critical load*** corresponding to the equality $n = 1$:

$$F_{cr} = \frac{\pi^2 EI_{\min}}{l^2}.$$

The value of critical load according to rod fixing conditions.

Euler's formula obtained for a rod with *pinned ends*. In the practice of calculations, there are also other ways the compressed rods. *Euler's formula* for calculating the ***critical load*** in different ways of fixing the rods has the form

$$F_{cr} = \frac{\pi^2 EI_{\min}}{(\mu l)^2}, \tag{2}$$

where $\boldsymbol{\mu}$ is *effective-length factors* for ideal columns, depends from types of fixing the rod:

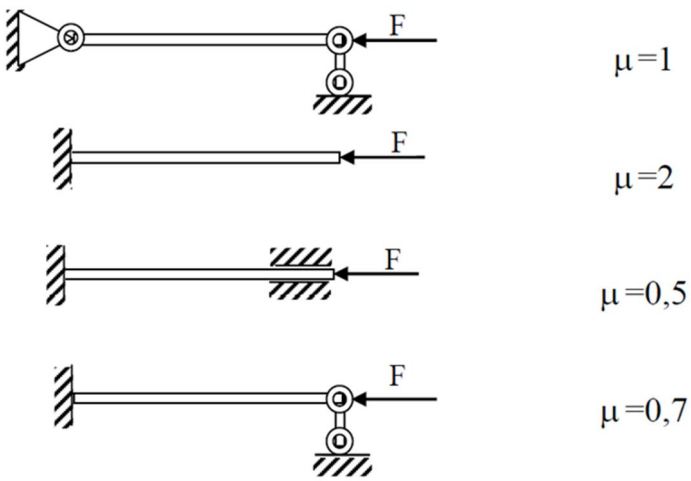

3 CRITICAL STRESS

Stability in limit of proportionality. In a compressed rod, *critical stresses* arise from a *critical load*:

$$\sigma_{cr} = \frac{F_{cr}}{A} = \frac{\pi^2 EI}{A(\mu l)^2}, \tag{3}$$

where ***A*** is cross section area of the rod.

Considering ***radius of gyration*** $i_{\min} = \sqrt{\frac{I_{\min}}{A}}$, we get

$$\sigma_{cr} = \frac{\pi^2 E \cdot i_{\min}}{(\mu l)^2}. \tag{4}$$

To introduce a nondimensional quantity – ***λ*** is the *flexibility* of the rod

$$\lambda = \frac{\mu l}{i_{\min}}. \tag{5}$$

Therefor *critical stress* is $$\sigma_{cr} = \frac{\pi^2 E}{\lambda^2}. \tag{6}$$

Since *Euler's formula* is get into the assumption that the *critical stresses* do not exceed the *limit of proportionality*, there are certain limits to its application

$$\sigma_{cr} = \frac{\pi^2 E}{\lambda^2} \le \sigma_{pr},$$

where σ_{pr} is the *limit of proportionality* of the material.

From this, we define which condition must satisfied by the flexibility of the rod for *Euler's formula*:

$$\lambda \ge \pi \sqrt{\frac{E}{\sigma_{pr}}}. \tag{7}$$

For rods made of low-carbon steel ST 3, with modulus of elasticity E = 2 105 *MPa* and proportionality limits $\boldsymbol{\sigma_{pr}}$ = 200 *MPa*, the ultimate flexibility will be equal to

$$\lambda_{\lim} = 3{,}142\sqrt{\frac{2 \cdot 10^5}{200}} \approx 100,$$

where for ST 3 *Euler's formula* is used at λ > 100.

Stability beyond the limit of proportionality. If the rod *flexibility* decreases, the *critical stress* increases, and if the *flexibility* is lower than the limit, the *critical stress* exceeds the limit of proportionality. In this case, use the empirical formulas. For example, *Yasinsky's* formula has the form

$$\sigma_{cr} = a - \lambda b, \tag{8}$$

where *a*, *b* are coefficients that depend on the material of the rod and are determined experimentally.

Table 1 – Coefficients *a*, *b* (*MPa*)

Material	*a*	*b*
ST 3	310	1.140
ST 5	464	3.617
Duralumin	380	2.185
Timber	29.3	0.194

According to *Yasinsky's formula*, *critical stresses* are calculated for rods of medium flexibility, which are widely used in many steel and reinforced concrete structures.

4 CALCULATION METHODS COMPRESSED RODS FOR STABILITY

In stability calculations, the critical stress considered "*damaging*" as the yield strength or strength limit in strength calculations. Therefore, the concept of *allowable stress on stability* [σ_{st}], which is defined as part of the critical stress:

$$[\sigma_{st}] = \frac{\sigma_{cr}}{k_{st}}, \tag{9}$$

where k_{st} is the *coefficient of stability*.

The stability condition requires that the stress does not exceed the allowable stress:

$$\sigma = \frac{F_{\max}}{A} \le [\sigma_{st}]. \tag{10}$$

The calculation of the *allowable stress* is complicated by the fact that the critical stress depends not only on the properties of the material, but also on the flexibility of the rod. In practical calculations, to determine the relationship between the allowable stress on stability and the allowable stress on compressive strength:

$$\frac{[\sigma_{st}]}{[\sigma]} = \frac{\sigma_{cr} \cdot k_t}{\sigma_t \cdot k_{st}} = \varphi,$$

where $[\sigma] = \frac{\sigma_0}{k_0}$ is *allowable stress* on compressive strength; $\boldsymbol{k_0}$ is *safety factor*.

Therefore $[\sigma_{st}] = \varphi[\sigma]$ (11), where $\boldsymbol{\varphi}$ is the *buckling coefficient*.

The stability condition has the form

$$\sigma = \frac{F_{\max}}{A} \le \varphi[\sigma].$$

$$\sigma = \frac{F_{\max}}{\varphi A} \le [\sigma], \qquad (12)$$

where $\boldsymbol{A}$ is cross section area of the rod; $[\sigma]$ is allowable stress on tension-compression strength.

Three types of problems on the stability condition:

1. *The stability control is* to verify the implementation of the stability condition (12) in the order:

– determine the minimum moment of inertia of the rod cross section and the minimum radius of gyration (with the same fixation in the main planes)

$$i_{\min} = \sqrt{\frac{I_{\min}}{A}};$$

– calculate the flexibility of the rod by the formula (5);

– choose the buckling coefficient $\boldsymbol{\varphi}$ according to table 2;

– obtained initial data is substituted into the condition of stability (12) to verify its implementation.

Table 2 – The buckling coefficient $\boldsymbol{\varphi}$ for different materials

Flexibility	St 2, St 3, St 4	St 5	Timber
$\boldsymbol{\lambda}$	$\boldsymbol{\varphi}$	$\boldsymbol{\varphi}$	$\boldsymbol{\varphi}$
1	***2***	***3***	***4***
0	1,00	1,00	1,00
10	0,99	0,98	0,99
20	0,96	0,95	0,97
30	0,94	0,92	0,93
40	0,92	0,89	0,87

1	*2*	*3*	*4*
50	0,89	0,86	0,87
60	0,86	0,82	0,71
70	0,81	0,76	0,60
80	0,75	0,70	0,48
90	0,69	0,62	0,38
100	0,60	0,51	0,31
110	0,52	0,43	0,25
120	0,45	0,36	0,22
130	0,40	0,33	0,18
140	0,36	0,29	0,16
150	0,32	0,26	0,14
160	0,29	0,24	0,12
170	0,26	0,21	0,11
180	0,23	0,19	0,10
190	0,21	0,17	0,09
200	0,19	0,16	0,08

2. *Determination of allowable load* from the condition of stability (12):

$$[F] \le \varphi[\sigma]A.$$

3. *Selection of the cross section of the rod* (design calculation), is based on the calculation of the cross-sectional area from the condition of stability (12):

$$A \ge \frac{F}{\varphi[\sigma]}.$$

This problem does not have a single solution, because the inequality includes two unknown quantities: the cross-sectional area of the rod ***A*** and the coefficient ***φ***, which depends on the still unknown cross-sectional dimensions, its form and length of the rod. Therefore, solve by the method of successive approximations with verification of intermediate results using the condition of stability in the following order:

– take an arbitrary value of the buckling coefficient of the first approximation φ_1 = 0,5,… 0,6 and calculate the cross-sectional area A_1 of the rod: $A_1 \ge \frac{F}{\varphi_1[\sigma]}$;

– according to the calculated area determine the cross-sectional dimensions or choose the profile number from the assortment;

– determine the radius of gyration i_{min} and the flexibility of the rod λ, find according to table 2 $\varphi(\lambda)$;

– compare φ_1 and φ (λ) and, if the discrepancy is small, check stability conditions (12). In the case of a significant difference between the values of and φ (λ) perform the second approximation, for which the optimal value of the coefficient φ_2 will be the average arithmetic $\varphi_2 = \dfrac{\varphi_1 + \varphi(\lambda)}{2}$.

After that, perform all the above actions again. To get a satisfactory solution, you usually need to make a few approximations.

Calculation Work

"CALCULATION OF THE COLUMN FOR STABILITY"

(the variant of the task is provided by the teacher).

Given:

For a given column:

1. Choose the cross section from the condition of equality of moments of inertia ($I_z = I_y$), using table 2 of the buckling coefficient (φ), [σ] = 160 *MPa*.
2. Determine the distance between the connecting straps on the base conditions of equality ($\lambda_x = \lambda$) of flexibility of separate branches between straps (λ_x) and columns as a whole (λ).
3. Check the cross section of the column for strength.
4. Determine the critical force (F_{cr}), critical stress (σ_{cr}) and the coefficient of stability (k_{st}).

COLUMN SCHEMES

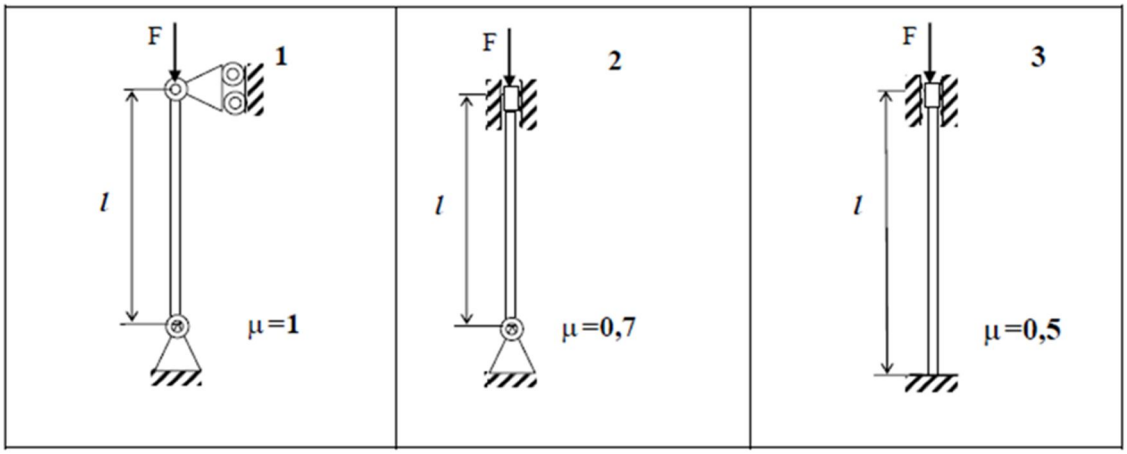

CROSS-SECTION SCHEMES

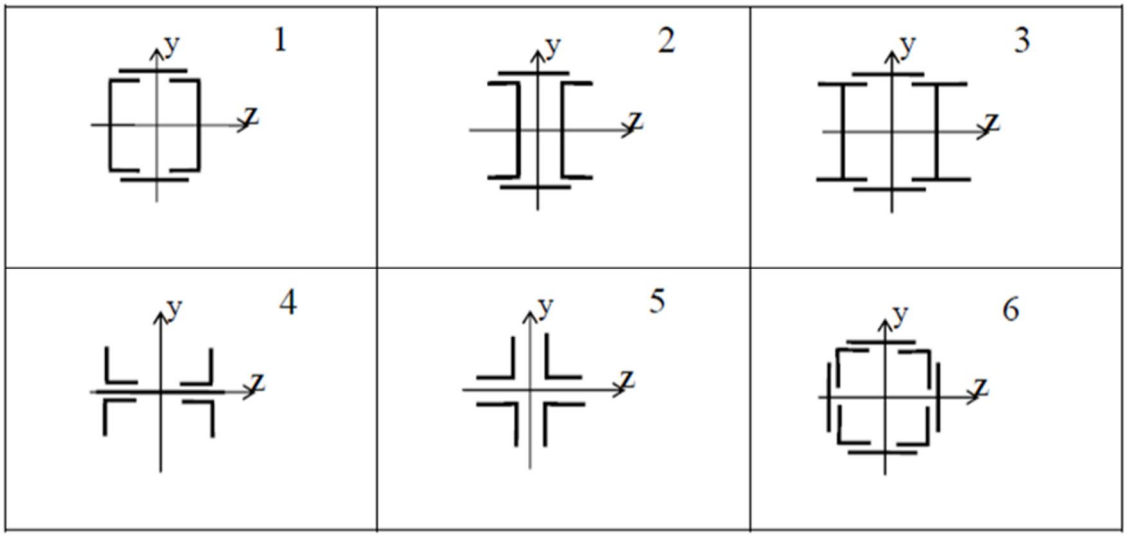

INPUT DATE

N var	1	2	3	4	5	6	7	8	9	10
F, *kN*	900	800	700	600	500	600	750	650	850	900
L, *m*	8	9	7	8	9	7	8	9	7	9

Example of Calculation Work

"CALCULATION OF THE COLUMN FOR STABILITY"

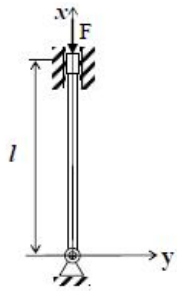

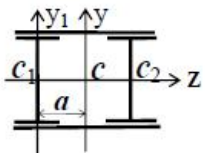

Given:

$F = 500\ kN$, $l = 9\ m$, $[\sigma] = 160\ MPa$

<u>Fixing: pinned at the base and fixed top ($\mu = 0.7$)</u>

1. Choose the cross section from the condition of equality of moments of inertia ($I_z = I_y$).

Strength conditions:

$$\sigma_{\max} = \frac{F}{A} \le \varphi[\sigma_{st}] \quad \rightarrow \quad A \ge \frac{F}{\varphi[\sigma_{st}]}.$$

Since the inequality includes two unknown quantities: the cross-sectional area ***A*** and the buckling coefficient ***φ***, the calculation is performed by the method of successive approximations.

Take an arbitrary value of the buckling coefficient ***φ*** = 0,5, then

$A = \dfrac{500}{0,5 \cdot 16} = 62,5$ cm^2. Since the cross section of the column consists of two *I-beams*, then $A_I = A/2 = 62,5/2 = 31,25$ cm^2. According to Assortment choose **I 22** with A = 30,6 cm^2.

Determine column flexibility

$$\lambda = \frac{\mu l}{i_z} = \frac{0,7 \cdot 900}{9,13} = 69.$$

Determine the buckling coefficient φ (table 2)

$\lambda_1 = 60,\ \varphi_1 = 0,86$	$\varphi(\lambda) = \varphi_1 = (\varphi_2 - \varphi_1)\dfrac{\lambda - \lambda_1}{\lambda_2 - \lambda_1} =$
$\lambda_2 = 70,\ \varphi_2 = 0,81$	$= 0,86 + (0,81 - 0,86)\dfrac{69 - 60}{70 - 60} = 0,815.$

II approximations. Take the average value of the buckling coefficient $\boldsymbol{\varphi}$:

$$\varphi = \frac{0,5 + 0,815}{2} = 0,66.$$

Repeat the calculation and fill in the second row of the table:

$$\varphi = 0,66, \qquad A = \frac{500}{0,66 \cdot 16} = 47,35 cm^2, \quad A_I = \frac{A}{2} = \frac{47,35}{2} = 23,68 cm^2.$$

I 18*a*, $A_I = 25,4$ cm^2, $I_z = 1430$ cm^4, $i_z = 7,510$ cm.

Determine column flexibility

$$\lambda = \frac{\mu l}{i_z} = \frac{0,7 \cdot 900}{7,51} = 84.$$

Determine the buckling coefficient $\boldsymbol{\varphi}$ (table 2)

$\lambda_1 = 80,\ \boldsymbol{\varphi_1} = 0,75$ $\lambda_2 = 90,\ \boldsymbol{\varphi_2} = 0,69$	$\varphi(\lambda) = 0,75 + (0,69 - 0,75)\dfrac{84 - 80}{90 - 80} = 0,73.$

III approximations. Take the average value of the coefficient $\boldsymbol{\varphi}$:

$$\varphi = \frac{0,6 + 0,73}{2} = 0,7.$$

Repeat the calculation and fill in the second row of the table:

$$A = \frac{500}{0,7 \cdot 16} = 44,6 cm^2, \quad A_I = \frac{A}{2} = \frac{44,6}{2} = 22,3 cm^2.$$

I 18 , $A_I = 23,4$ cm^2, $I_z = 1290$ cm^4, $i_z = 7,42$ cm.

Determine column flexibility

$$\lambda = \frac{\mu l}{i_z} = \frac{0,7 \cdot 900}{7,51} = 84.$$

Determine column flexibility

$$\lambda = \frac{\mu l}{i_z} = \frac{0,7 \cdot 900}{7,42} = 84,9, \quad \varphi(\lambda) = 0,72.$$

Finally we take:

I 18 , A_I = 23,4 cm^2, I_z = 1290 cm^4, I_y = 82,6 cm^4, i_z = 7,42 cm,

$i_y = i_{min}$ = 1,88 cm.

CALCULATION RESULTS

φ	A, cm^2	A_I, cm^2	Assortment				λ	φ
			I	A_I, cm^2	I_z, cm^4	i_z, cm		
0,50	62,50	31,25	**I** 22	30,6	2550	9,13	69,0	0,815
0,66	47,35	23,68	**I** 18a	25,6	1430	7,51	84,0	0,730
0,70	44,6	22,3	**I** 18	23,4	1290	7,42	84,9	0,720
0,71	44,0	22,0	**I** 18	23,4	1290	7,42	84,9	0,720

Because the column must be equally stable in both main cross-sectional planes, i. e. $I_z = I_y$, determine the distance a between the axis of the I-beam:

$$2I_z = 2 \cdot (I_{y_1} + a^2 \cdot A_I),$$

$$2 \cdot 1290 = 2 \cdot (82.6 + a^2 \cdot 23.4)$$

$$a = \sqrt{\frac{1290 - 82.6}{23.4}} = 7.2 \text{ cm.}$$

The distance a between the axis $2a$ = 14,4 cm.

1. Determine the distance between the connecting straps on the base conditions of equality ($\lambda_x = \lambda$) of flexibility of separate branches between straps (λ_x) and a column as a whole (λ). We will connect I-beams with straps along the all length of the column, provided $\lambda_x = \lambda$, where $\lambda = \frac{\mu l_x}{i_{\min}}$ – the flexibility of a single I-beam branch between two connecting strap:

$$\lambda = \frac{\mu l_x}{i_{\min}} \rightarrow l_x = \frac{\lambda \cdot i_{\min}}{\mu} = \frac{85 \cdot 1,88}{0,72} = 2254\, cm.$$

Since the distance between the straps is 2 m 25 cm and the length of the column is 9 m, we take the number of connecting straps:

$$n = \frac{l}{l_x} = \frac{900}{225} = 4.$$

2. Check the column for strength, *[σ]* = 160 *MPa*.

$$\sigma = \frac{F}{A} \le \varphi[\sigma_{st}], \rightarrow \sigma = \frac{F}{\varphi A} \le [\sigma_{st}]$$

$$\sigma = \frac{500}{0,72 \cdot (23,4 \cdot 2)} = 148\ MPa \le [\sigma].$$

3. Determine the *safety factor* (***k**st*). Since the flexibility of the column λ = 85 < ***λlim*** = 100 , the critical force is determined by the formula of Yasinsky:

$$F_{cr} = A \cdot (a - \lambda \cdot b) = 23,4 \cdot 2 \cdot (31 - 0,14 \cdot 85) = 997\ kN$$

Safety factor ***k**st* $$k_{st} = \frac{F_{cr}}{F} = \frac{997}{500} \approx 2.$$

REFERENCES

1. Дарков А. В. Сопротивление материалов. / А. В. Дарков, Г. С. Шпиро / – М.: Высш. шк., 1975. – 654 с.

2. Беляев Н. М. Сопротивление материалов. / Н. М. Беляев . – М.: Наука, 1968. – 352 с.

3. Сопротивление материалов / Под общ. ред. Г. С. Писаренко /. – Київ : Вища школа, 1979. – 696 с.

4. Опір матеріалів з основами теорії пружності й пластичності / В. Г. Піскунов, Ю. М. Феодоренко , В. Ю. Шевченко та ін. – Київ : Вища школа, 1994. – 423 с.

5. Чихладзе Е. Д. Опір матеріалів : навч. посібник / Е. Д. Чихладзе . – Харків : УкрДАЗТ, 2002. – 362 с.

6. Шпачук В. П. Опір матеріалів. Частина 1. Опір матеріалів стержневих елементів конструкцій при базових навантаженнях : конспект лекцій для студентів 1–2 курсів денної та заочної форм навчання за спеціальностями 192 – Будівництво та цивільна інженерія, 185 – Нафтогазова інженерія та технології / В. П. Шпачук, О. О. Чупринін, Н. В. Середа, В. О. Скляров ; Харків. нац. ун-т міськ. госп-ва ім. О. М. Бекетова. – Харків : ХНУМГ ім. О. М. Бекетова, 2019. – 115 с.

Виробничо-практичне видання

Методичні рекомендації
для практичних занять, самостійної
та розрахунково-графічних робіт
з навчальної дисципліни

« ОПІР МАТЕРІАЛІВ »

«Стійкість стиснутих стержнів»

(англ. мовою)

(*для студентів 2 курсу денної форми навчання*
за спеціальністю
192 – Промислове та цивільне будівництво)

Укладачі **СЕРЕДА** Наталя Василівна
ГАРБУЗ Алла Олегівна
ЧУПРИНІН Олександр Олексійович

Відповідальний за випуск *Т. О. Супрун*
За авторською редакцією
Комп'ютерне верстання *А. О. Гарбуз*

План 2021, поз. 217М

Підп. до друку 13.04.2021 Формат 60 × 84/16
Друк на ризографі. Ум. друк. арк. 1,0
Тираж 50 пр. Зам. №

Видавець і виготовлювач:
Харківський національний університет
міського господарства імені О. М. Бекетова,
вул. Маршала Бажанова, 17, Харків, 61002
Електронна адреса: rectorat@kname.edu.ua
Свідоцтво суб'єкта видавничої справи:
ДК № 5328 від 11.04.2017