MINISTRY OF EDUCATION AND SCIENCE OF UKRAINE

O. M. BEKETOV NATIONAL UNIVERSITY
OF URBAN ECONOMY IN KHARKIV

Methodological guidelines
for the implementation
of the practical and individual work
on the subject

"TIMBER CONSTRUCTIONS"

(for 3d-year full-time and part-time students education level "bachelor"
specialty 192 –Building and civil engineering)

Kharkiv – O. M. Beketov NUUE – 2018

Methodological guidelines for the implementation of the practical and individual work on the subject “Timber constructions” (for 3d-year full-time and part-time students education level “bachelor” specialty 192 – Building and civil engineering) / O. M. Beketov National University of Urban Economy in Kharkiv ; com. : O. M. Pustovoitova, S. M. Zolotov. – Kharkiv : O. M. Beketov NUUE, 2018. – 26 p.

Compilers : O. M. Pustovoytova,
S. M. Zolotov

Reviewer: Cand of technical science N. O. Psurtseva,
Cand of pedagogical science A. M. Krokhmal

Recommended by the department of building construction record № 6 on 22.02.2018.

CONTENTS

FOREWORD

The course "Timber constructions" gives an opportunity to learn the statement of the calculation of Timber structural elements, and the expectation of continuous plane, cross and spatial structures.

This guide provides information about connections of Timber structures elements, examples of elements calculation and plane solid Timber construction.

The guidance is made according to “Timber construction” the course program.

Its content corresponds to the nature of the discipline teaching at the Department of Building Constructions

PRACTICAL AND INDIVIDUAL WORK

Graphic section must be performed on a sheet of drawing paper A-1, where it must be shown:

a) part of the plan in roof construction in scale 1:100 - 1:400

b) basic geometric scheme of supporting structure (truss construction) scale in 1:500 - 1:1000

c) Working drawings of main bearing roof structure (truss construction) in scale 1:20 ÷ 1:40. In symmetric structures are allowed to show the not entire structure, but a half of it; sections of same elements are shown in the drawing with indicating the dimensions;

d) Details of the main supporting structure (components and supporting parts, joints and components) 1: 5 - 1:10;

e) specification of materials in the a mounting core brand supporting structure (for metal and wood separately);

f) notes, which indicate which material the main supporting structure in made which, moisture of wood class of glue for bonding wood elements; legs and classes electrodes for metal elements; actions to protect the wood from rot and fire and metal from corrosion.

All the sizes on the drawings must be in millimetres.

The implementation is accompanied by creating format of explanatory notes of writing paper A-4.

The note should have references to the normative and technical literature ..

It sections should be reflected in the notes the following sections:

a) choice of main supporting roof constructions of buildings (arches or beams) determining coefficient of self weight and per cent outlay of metal;

b) calculation of elements of walling constructions (roof slabs in solving of roof without binding rafter, flooring under the roof and bars in solving of binding rafter);

c) Calculation of main supporting constructions (beam or arches);

d) solving of problem of wood protection from rot and fire, and metal protectionfrom corrosion. .

TASK 1

Calculation of rafters for the shingle tiles coating

Output data. The distance between the supports (rafters span) $l = 3$ m.

It should be done calculation of loads on 1 running m of horizontal projection of sloped beam (tab. 1)

Tabel 1

№	Name and calculation of loads	Normative load $q^н$, kN/m	Index of reliability for load γ_t	Calculated load q, kN/m
1	Shingle tiles $\frac{0,5}{0,819} \cdot 1,33$	0,812	1,1	0,893
2	Roof laths $\frac{0,05 \cdot 0,06 \cdot 5}{0,3 \cdot 0,819} \cdot 1,33$	0,081	1,1	0,09
3	Rafter leg Preliminary cross-section	0,092	1,1	0,101
4	Snow load $(1,5 \cdot 0,714 \cdot 1,33)$	1,424	1,6	2,278
	Sum	2,409		3,362

Rafters is regarded as a split singl-span beam with $l = 3$ m

Determine the largest bending moment

$$M = \frac{q \cdot l^2}{8} = \frac{3,362 \cdot 3^2}{8} = 3,783 \text{ kN·m.}$$

The required moment of resistance of rafters section in condition of strength, when $R_b = 13$ MPa for 2nd grade wood

$$W_{nomp} = \frac{M}{R_b} = \frac{3,783 \cdot 10^3}{13} = 291 \text{ cm}^3.$$

Consider several options in choosing of trussing section (Fig. 10 c)

If the rafters is made with the boards of 5 cm thickness, the required heigh to f section is

$$h_{nomp} = \sqrt{\frac{6W_{nomp}}{b}} = \sqrt{\frac{6 \cdot 291}{5}} = 18,7 \text{ cm.}$$

Take board by section with 5 × 20 cm and $F = 100$ cm^2

$$W_x = \frac{b \cdot h^2}{6} = \frac{5 \cdot 29^2}{6} = 333 \text{ cm}^3; \qquad J_x = \frac{b \cdot h^3}{6} = \frac{5 \cdot 29^3}{6} = 3333 \text{ cm}^4.$$

If the rafters is made with by boards of 10cm width then

$$h_{nomp} = \sqrt{\frac{6 \cdot 291}{10,0}} = 13,2 \text{ cm.}$$

Take bars with the section 10 × 15 cm $F = 150$ cm^2

$$W_x = \frac{10 \cdot 15^2}{6} = 375 \text{ cm}^3; \qquad J_x = \frac{10 \cdot 15^3}{6} = 2813 \text{ cm}^4.$$

If the rafters are made with plates width of D / 2, then moments of resistance and inertia of the cross section can be found by formulas

$$W_x = 0{,}048 \cdot Д^3; \qquad J_x = 0{,}0238 \cdot Д^4 \text{ (appendix 1).}$$

Knowing this,we candetermine the desired diameter of plate

$$Д_{потр} = \sqrt[3]{\frac{W_{потр}}{0{,}048}} = \sqrt[3]{\frac{291}{0{,}048}} = 18{,}2 \text{ cm.}$$

Take a plate with diameter in thinner end $Д_0 = 18\,\text{cm}$ (16 cm - is too small)

Довжина кроквяної ноги по схилу

T he length of the rafter down the hill

$$l_1 = \frac{l}{\cos\alpha} = \frac{300}{0{,}819} = 367 \text{ cm.}$$

Then the diameter of the plate in the middle of the span will be

$$Д = Д_0 + 0{,}008\frac{l_1}{2} = 18 + 0{,}008 \cdot \frac{367}{2} = 19{,}47 \text{ cm,}$$

where 0,008 m - characteristic value of change in diameter of logs on each meter of length

Moment of resistance and inertia moment can be found the by equations given above

$$W_x = 0{,}048 \cdot 19{,}47^3 = 354{,}3 \text{ cm}^3;$$

$$J_x = 0{,}0238 \cdot 19{,}47^4 = 3420{,}1 \text{ cm}^4.$$

We have the smallest moment of inertia for section of bars.

Relative deflection for this case will be

$$\frac{f}{l_1} = \frac{5}{384} \cdot \frac{2{,}409 \cdot 300^3}{10^5 \cdot 2813 \cdot 0{,}819} = \frac{1}{272} < \frac{1}{200},$$

In other words deflection rafters meet the requirements of rigidity.

If we take logs rafters which are cut by one edge with a width of $D/3$, the moment of resistance and inertia of such section can be found by the equation:

$$W_x = 0{,}096 \cdot Д^3; \qquad J_x = 0{,}0476 \cdot Д^4 \text{ (appendix 1).}$$

The required moment of such logs section in such condition of rigidity is

$$J_{потр} = \frac{5}{384} \cdot \frac{q^н \cdot l^3 \cdot 200}{E \cdot \cos\alpha} = \frac{5}{384} \cdot \frac{2{,}409 \cdot 300^3 \cdot 200}{10^5 \cdot 0{,}819} = 2068 \text{ cm}^4.$$

if $f = \frac{1}{200} \cdot l_1$

From this data find the required diameter of logs

$$Д_{потр} = \sqrt[4]{\frac{J_{потр}}{0{,}0476}} = \sqrt[4]{\frac{2068}{0{,}0476}} = 14{,}44 \text{ cm.}$$

$$Д = 13 + 0{,}008 \cdot \frac{367}{2} = 14{,}47 \text{ cm.}$$

Take the beam in diameter of the small end $D_0 = 13$ cm. Then in a calculated section (in the middle of the span)

The moment of resistance in the same section is

$W_x = 0{,}096 \cdot Д^3 = 0{,}096 \cdot 14{,}47^3 = 291$ cm^3.

The stresses in a calculated section is

$$\sigma = \frac{M}{W_x} = \frac{3{,}783 \cdot 10^3}{291} = 13 \text{ MPa} < 16 \text{ MPa},$$

where 16 MPa - design resistance to bending logs R_b that do not have incut in the design section.

TASK 2

Calculation of lagged rafters with double-row formation of intermediate bearing for the shingles coating

Output data: 1 running. m load of horizontal projection of rafter, normative $q^н = 2{,}75$kN / m; calculated $q = 3{,}45$ kN / m; angle to the horizontal rafter $\alpha = \frac{40^0}{\cos\alpha} = 0{,}766$; $\sin\alpha = 1{,}75$ m.

The total length of the rafter is:

$$l' = \frac{l_1 + l_2}{\cos\alpha} = \frac{3 + 1{,}75}{0{,}766} = 6{,}2 \text{ cm}.$$

This allows to perform a rafter with 6.5 m log without joints, and for the design scheme it is a double-span continuous beam with uniformly distributed load.

Dangerous section of a rafter is section on the intermediate bearing

Bending moment in that section is

$$M = \frac{q \cdot \left(l_1^3 + l_2^3\right)}{8 \cdot \left(l_1 + l_2\right)} = \frac{3{,}45 \cdot \left(3^3 + 1{,}75^3\right)}{8 \cdot \left(3 + 1{,}75\right)} = 2{,}94 \text{ kN·m}.$$

Vertical pressure in the point C equals to the right response bearing of double-span beams, and by taking into account bending moment action:

$$C = \frac{q \cdot l_2}{2} - \frac{M}{l_2} = \frac{3{,}45 \cdot 1{,}75}{2} - \frac{2{,}94}{1{,}75} = 1{,}34 \text{ kN}.$$

In balanced termination of both slopes vertical pressure in the point C is doubles $P = 2 \cdot C = 2{,}68$ kN

Protecting this pressure in the direction of the rafter, it is found out compression stress effort in the top part of the rafter

$$N = \frac{P}{2 \cdot \sin\alpha} = \frac{2{,}68}{2 \cdot 0{,}643} = 2{,}09 \text{ kN}.$$

The rafter is 13 cm log in diameter of the thiner end.

To get a bigger calculated diameter of the log in a dangerous section, it is necessary to place thin-end log toward the rafter plate ahd radical end to the ridge.

Thus calculated average diameter of the log of the intermediate bearing is

$$Д = Д_0 + 0{,}008\frac{l_1}{\cos\alpha} = 13 + 0{,}008\cdot\frac{475}{0{,}766} \approx 16 \text{ cm.}$$

The cross section of rafter leg on intermediate supports has the form wich is shown in Fig. 1,a (cut 1-1)

On the upper side the log is cut on 0.5 cm depth for roof lathes, on the underside the log is weakened with a joggle in a binding rafter on $h_{вр} = 3$ cm depth, on each side there are 1.5 cm trails for legers are snug fit.

For simplify the calculation the resulting section is believed like rectangular.

Then:

$$F_{нт} = 13\cdot 12{,}5 = 162 \text{ cm}^2,$$

$$W_{нт} = \frac{13\cdot 12{,}5^2}{6} = 339 \text{ cm}^3.$$

Check the strength of the rafter leg section on the intermediate support on the compressive with preamble:

$$\sigma = \frac{N}{F_{нт}} + \frac{M}{W_{нт}} = \frac{2{,}09\cdot 10^2}{162} + \frac{2{,}94\cdot 10^3}{339} = 9{,}96 \text{ MPa} < R_b = 13 \text{ MPa.}$$

Check the stiffness of middle lower part of the rafter leg section. For this it should be found calculated log diameter

$$Д = 13 + 0{,}008\cdot\frac{300}{2\cdot 0{,}766} \approx 14{,}5 \text{ cm;}$$

moments of inertia and resistance of the deck section are trimed on top on the wide $Д/3$ ($h_{cm} \approx 0{,}5$ cm) 3

$$J = 0{,}0476\cdot 14{,}5^4 = 2104 \text{ cm}^4.$$

$$W = 0{,}096\cdot 14{,}5^3 = 293 \text{ cm}^3;$$

relative deflection

$$\frac{f}{l_1} = \frac{5}{384}\cdot\frac{q^н\cdot l_1^3}{E\cdot J\cdot\cos\alpha} - \frac{M\cdot l_1}{16\cdot E\cdot J\cdot\cos\alpha} = \frac{5\cdot q^н\cdot l_1^3 - 24\cdot M\cdot l_1}{384\cdot E\cdot J\cdot\cos\alpha} =$$

$$= \frac{5\cdot 2{,}75\cdot 300^3 - 24\cdot 2{,}94\cdot 10^4\cdot 300}{384\cdot 10^5\cdot 2104\cdot 0{,}766} = \frac{1}{388} < \frac{1}{200},$$

in other word deflection of rafter is according to stiffness [9].

It should be checked the strain the same section of the rafter, that is in the middle of the lower part, considering of to simplify the calculation of this part a rafter as a beam on two supports. Thus bending moment is

$$M = \frac{q\cdot l_1^2}{8} = \frac{3{,}45\cdot 3^2}{8} = 3{,}881 \text{ kN·m.}$$

bending stress

$$\sigma = \frac{M_1}{W} = \frac{3{,}881 \cdot 10^3}{293} = 13{,}25 \text{ MPa} < 16 \text{ MPa},$$

Where $R_b = 16$ MPa design resistance of deflection for a log without cutting in a design (netto) cross section

It should be find the tension stresses in the ledges, which is equal to a horizontal projection of force N

$$H = N \cdot \cos\alpha = \frac{P}{2\text{tg}\alpha} = \frac{2{,}68}{2 \cdot 0{,}839} = 1{,}6 \text{ kN}.$$

The ledger is made of two plates with a diameter of 14 cm.

Fixing calculation of a ledger to a rafter leg, despite on the slight effort H, isn't performed

It should be constructively install three nails 5 × 150 mm on each side of the junction with the opposite hammer in nails

It should be checked the adequacy of joggle depth in place of a rafter leg support on the deflection.

When the joggle depth is $h_{вр} = 3$ and calculated diameter of a log is $D = 16$ cm thus the area of joggle compression perpendicular strain is

$$F_{зім.} = \frac{F_{сегм.}}{\sin\alpha} = \frac{26{,}1}{0{,}643} = 40{,}6 \text{ cm}^2,$$

Where the segment area is found in the special tables for logs with the parameters outlined above

The stresses of joggle compression perpendicular strain ist the amount of pressure on the middle and end (at the ridge) support of double-supported beam:

$$V = \left[\frac{q \cdot (l_1 + l_2)}{2} + \frac{M}{l_1} + \frac{M}{l_2}\right] + \left(\frac{q \cdot l_1}{2} - \frac{M}{l_2}\right) = \frac{q \cdot (l_1 + 2 \cdot l_2)}{2} + \frac{M}{l_1} =$$

$$= \frac{3{,}45 \cdot (3 + 2 \cdot 1{,}75)}{2} + \frac{2{,}94}{3} = 12{,}18 \text{ kN}.$$

This stress acts with angle 90^0 to the direction of the wood fibers.

Compression perpendicular stresses in joggle

$$\sigma_{зім.90} = \frac{12{,}18 \cdot 10}{40{,}6} = 3 \text{ MPa} = R_{зім.90},$$

Thus the stresses by compression perpendicular does not exceed the design resistance value of the compression perpendicular.

TASK 3
Calculation of double duckboards
which is constructed on the building side

Output data. Initial data for design
truss scheme is segmen truss (Fig. 1)
length of a truss is 33m
truss distance is 5.3 m
Type of roofing – binding rafter
Type of a coating is worm rolled:
the length of the building is 53m
height truss in the ridge is 5.3 m

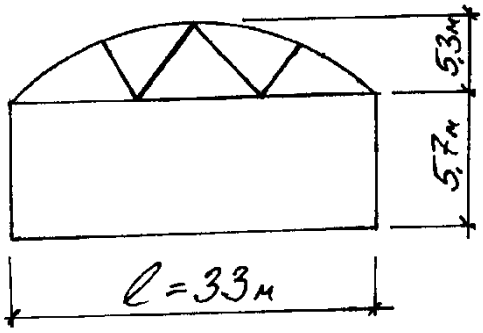

Figure 1 - Scheme of building in cross section

To calculate the distance between the binding rafters of a roofing it should be found the length of the sloping truss AB with roofing slope of 1:12 (Fig. 2).

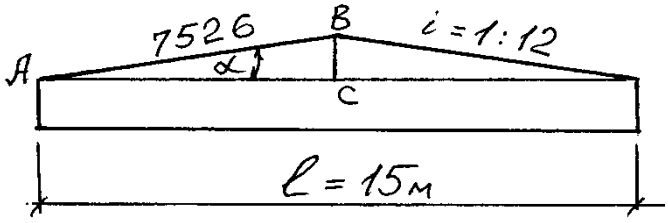

Figure 2 - To calculate the distance between the binding rafter

$$BC = \frac{1}{12} \cdot \frac{l}{2} = \frac{1}{12} \cdot \frac{15}{2} = 0{,}625 \text{ m.}$$

$$AB = \sqrt{AC^2 + BC^2} = \sqrt{7{,}5^2 + 0{,}625^2} = 7{,}526 \text{ m.}$$

According to the size of AB it should be taken the distance between the binding rafters $b_n = 1{,}25$ m (1,25 x 6 = 7,5 m).

For calculation it should be taken : solid timber (pine wood of 3rd grade), binding rafters distance (1.25 m);section of board of working (b x h = 15 x 2.2 cm), distance which are laid with a gap $S_0 = 10$ cm and the thickness of the upper continuous protective duckboards is $\delta = 1{,}6$ cm.

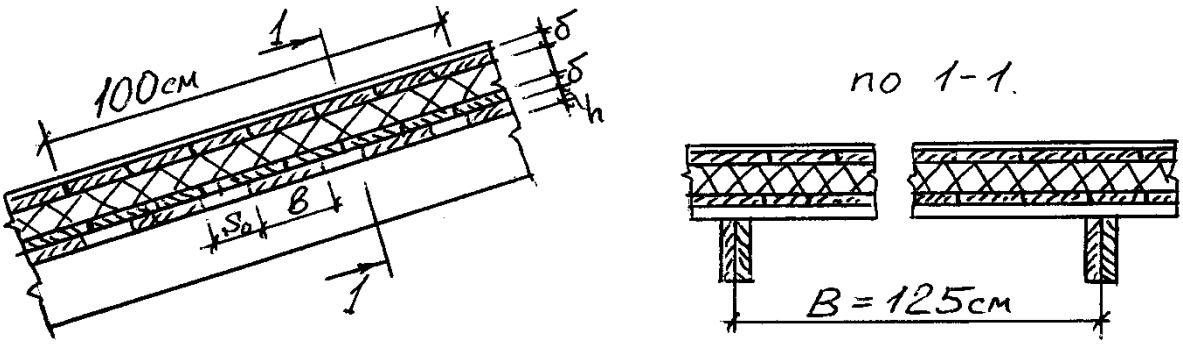

Figure 3 - Duckboarding calculation

Calculation of duckboarding should be done for band with width of 100 cm. The incline angle are not accounted.

It should be cared out the calculation of loads on 1 running. m. of the duckboarding calculation strip (Fig. 3).

№	Name of loads	$q^н, \frac{кН}{м}$	γ_f	$q, \frac{кН}{м}$
1.	Three-rolled roofing	0,10	1,2	0,12
2.	leveling duckboarding 0,016 x 5,0	0,08	1,1	0,088
3.	Thinsulate $\delta = 0{,}07$ m; $\gamma = 0{,}5$ kN/m^3	0,035	1,2	0,042
4.	Protective duckboarding 0,016 x 5,0	0,08	1,1	0,088
5.	Working duckboarding $0{,}15 \cdot 0{,}022 \frac{100}{15+10} \cdot 5{,}0$	0,066	1,1	0,073
	Sum $q^н_{с.в} = 0{,}361$		$q_{с.в} = 0{,}411$	
6.	Snow load	1,00	1,6	1,60
	$q^н = 1{,}361$		$q = 2{,}011$	

Design model of duckboarding is taken as duble-span beam wich span is $l = 1{,}25$ m.

It should be calculated the maximum bending moment at the first combination of loads wich is dead load and snow (Fig. 4)

$$M^1_{max} = \frac{ql^2}{8} = \frac{2{,}011 \cdot 1{,}25^2}{8} = 0{,}393 кН\ м\ .$$

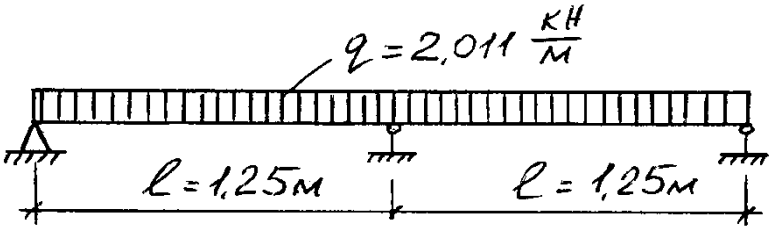

Figure 4 - Design scheme of duckboarding for the first combination loads

Determine the maximum bending moment for the second combination of loads - the dead load of the coating and the concentrated load p = 1,2 kN (Fig. 5)

$$M^2_{\max} = 0{,}07 q_{c.в} l^2 + 0{,}207 \cdot P \cdot l = 0{,}07 \cdot 0{,}411 \cdot 1{,}25^2 + 0{,}207 \frac{1{,}2}{0{,}5} \cdot 1{,}25 = 0{,}666 \text{ кН} \cdot \text{м}.$$

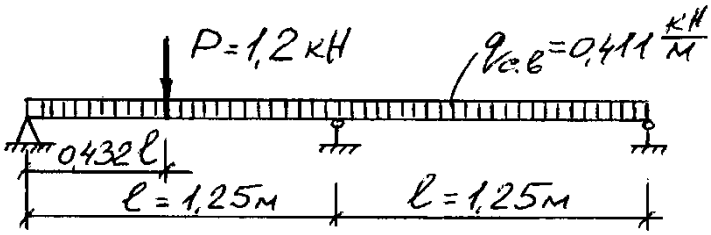

Figure 5 - Design schemeof the duckboarding at the second combination of loads

More unprofitable for checking the durability of the covering is the second case of loading.

Calculatethe moment of resistance of the covering

$$W_{HT} = \frac{bh^2}{6} \cdot \frac{100}{b + S_0} = \frac{15 \cdot 2{,}2^2}{6} \cdot \frac{100}{15 + 10} = 48{,}4 \text{ cm}^3.$$

$\frac{100}{15+10}$ is the number of boards, which are enclosed at the width of the covering of 100 cm

The test of the durability of the covering for the second combination of loads is perfomd:

$$\sigma = \frac{M^2_{\max}}{W_{HT}} = \frac{0{,}666 \cdot 10^3}{48{,}4} = 13{,}76 \text{ МПа} < R_u \cdot 1{,}2 = 13{,}0 \cdot 1{,}2 = 15{,}6 \text{ MPa}.$$

1,2 is the coefficient of working conditions, taking into account the short duration of the concentrated load action.

The condition of durability is complied.

The stiffness of the covering for the first combination of loads shold be checked.

To do this, we first find the moment of inertia of the covering:

$$J = W \cdot \frac{h}{2} = 48{,}4 \cdot \frac{2{,}2}{2} = 53{,}24 \quad \text{cm}^4.$$

The relative deflection of covering should be determined

$$\frac{f}{l} = \frac{2{,}13}{384} \cdot \frac{q^H \cdot l^3}{E \cdot J} = \frac{2{,}13}{384} \cdot \frac{1{,}361 \cdot 10^{-2} \cdot 125^3}{10^3 \cdot 53{,}24} = \frac{1}{361} < \frac{1}{150},$$

So the requirement for stiffness of covering is complied.

TASK 4
Calculation of a mated multi-span binding rafter

Output data: The distance of the main bearing constriction is 4.0 m. The other data are the same as in the covering calculation.

Solution: For calculation it should be taken approximately binding rafter of two boards of the 2nd grade pine wood with a cross section of 4.4 x 17.5 cm.

The normative load of the binding rafter of 1m2 is

$$g^H_{c.в.} = \frac{2 \cdot 0{,}044 \cdot 0{,}175 \cdot 5{,}0}{1{,}25} = 0{,}0616 \quad \frac{\text{кН}}{\text{м}^2},$$

Calculated load

$$g_{c.в.} = 0{,}0616 \cdot 1{,}1 = 0{,}068 \quad \frac{\text{кН}}{\text{м}^2}.$$

Have added these loads to previously received loads on the duck boards, we get

$$g^H = 1{,}361 + 0{,}0616 = 1{,}4226 \ \frac{\text{кН}}{\text{м}^2};$$

$$g = 2{,}011 + 0{,}068 = 2{,}079 \ \frac{\text{кН}}{\text{м}^2}.$$

It should be found the load on 1 r. m of binding rafter at a distance of 1.25 m between them:

$$q^H = 1{,}4226 \cdot 1{,}25 = 1{,}78 \ \frac{\text{кН}}{\text{м}};$$

$$q = 2{,}079 \cdot 1{,}25 = 2{,}60 \ \frac{\text{кН}}{\text{м}}.$$

The model of a binding rafter is taken the same as in the model with the same deflection, that is $x = 0{,}2113l$ (Fig. 6).

It should be accepted $l_{кр} = l$, that is, we don't have a condition for possibility to reduce the size of the last spans.

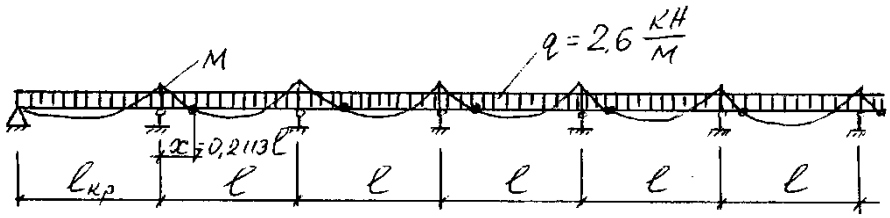

Figure 6 - Design scheme of the binding rafter

It should be determined the maximum bending moment on the first intermediate support under the previous conditions

$$M_{\max} = \frac{ql^2}{10} = \frac{2{,}60 \cdot 4^2}{10} = 4{,}16 \text{ kN.m.}$$

The necessary moment resistance of the binding rafter should be found

$$W_{TP} = \frac{M_{\max}}{R_u} = \frac{4{,}16 \cdot 10^3}{13{,}0} = 320 \text{ cm}^3.$$

For this moment of resistance the cross section of 2 x (4.4 x 15) cm should be taken

$$W = \frac{bh^2}{6} = \frac{2 \cdot 4{,}4 \cdot 15^2}{6} = 330 \text{ cm}^3 > 320 \text{ cm}^3.$$

It should be checked the strength of the binding rafter

$$\sigma = \frac{4{,}16 \cdot 10^3}{330} = 12{,}6 \text{ МПа} < R_u = 13{,}0 \text{ MPa},$$

so the requirement for the binding rafter strength has been done

It should be checked the the binding rafter stiffness, for this at the first it should be determine the moment of inertia of the binding rafter section

$$J = \frac{bh^3}{12} = \frac{2 \cdot 4{,}4 \cdot 15^3}{12} = 2475 \text{ cm}^4.$$

$$\frac{f}{l} = \frac{2{,}5}{384} \cdot \frac{q^H \cdot l^3}{E \cdot J} = \frac{2{,}5}{384} \cdot \frac{1{,}78 \cdot 10^{-2} \cdot 400^3}{10^3 \cdot 2475} = \frac{1}{333} < \frac{1}{200},$$

so, the adopted binding rafter cross section also meets the the conditions of stiffness

TASK 5
Calculation of binding rafter

It should be taken nails which ~~band~~ joint the binding rafter about ∅3 mm, $l_{гв} = 80$ mm.

It should be calculated the distance from the axis of the support to the center of the about: $x = 0{,}2113l = 0{,}2113 \cdot 4{,}0 = 0{,}84$ m.

It should be calculated the distance from the axis of support to the center of the nails in two-rowed placement (Fig. 7)

$$x_{гв} = 84 - (6 + 3) = 75 \text{ cm},$$

where 6 cm is the distance from the about to the first row of nails; 3 cm is a half of the distance between the rows of nails.

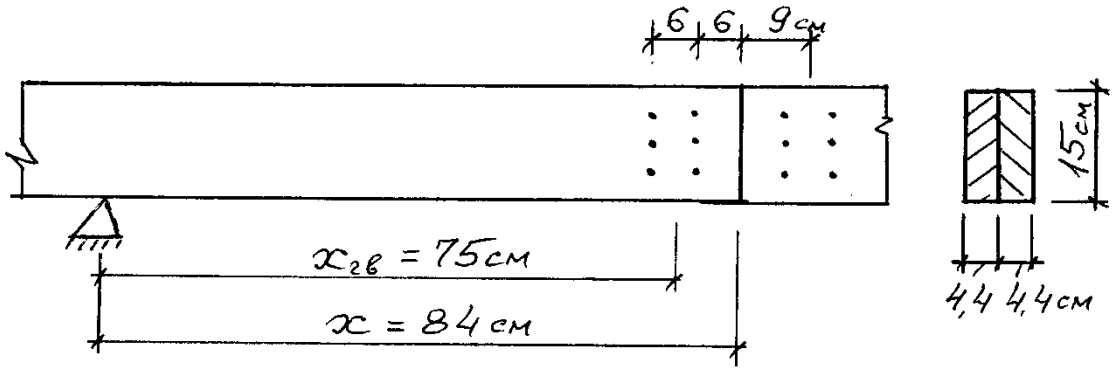

Figure 7 - Scheme to the calculation joint of the binding rafter about

It should be found the calculated lenth of the nail binding in the second unhammered through board of the binding rafter:

$$a_{гв} = l_{гв} - c - 0{,}2 \cdot n_{ш} - 1{,}5 d_{гв} = 8 - 4{,}4 - 0{,}2 \cdot 1 - 1{,}5 \cdot 0{,}3 = 2{,}65 \text{ см},$$

where c = 4.4 cm - the thickness of the board that is hammered through;

$n_{ш} = 1$ - the number of shear plane

0.2 cm - calculated deformation of the displacement;

$1.5 d_{гв}$ - the length of the sharpened part of the nail;

$a_{гв}$ = 2.65 cm> 4 $d_{гв}$ = 4 · 0,3 = 1,2 cm, that is, the requirement of the BNiP II25-80 is met.

It should be found the minimum bearing capacity of a single-cut nail:

$$T^{c}_{гв} = 0{,}50 cd = 0{,}50 \cdot 4{,}4 \cdot 0{,}3 = 0{,}66 \text{ kN};$$

$$T^{u}_{гв} = 2{,}50 d^2 + 0{,}01 a^2 = 2{,}50 \cdot 0{,}3^2 + 0{,}01 \cdot 2{,}65^2 = 0{,}2953 \text{ kN},$$

which is less $4{,}0 d^2 = 4{,}0 \cdot 0{,}3^2 = 0{,}36$ kN.

It should be accepted less value of bearing capacity from the obtained values

It should be found the required number of nails on each side of the abut

$$n_{гв} = \frac{M_{on}}{2 x_{гв} \cdot T_{гв}} = \frac{4{,}16 \cdot 10^2}{2 \cdot 75 \cdot 0{,}2953} = 9{,}4 \text{ nails}$$

It should be taken 10 nails

It should be placed them in two rows of 5 nails in a row

It should be set two nails ∅3 mm, 80 mm through 50 cm in the other part of the binding rafter without calculating to ensure the generality of the work of its two boards

It should be checked the possibility of placing the received number of nails - 10 pieces on each side of the abut according to BNiP II 25-80 (Fig. 8)

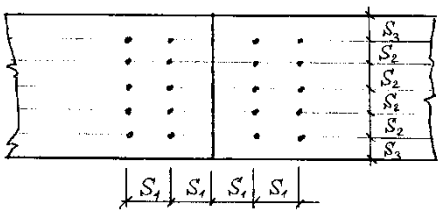

Figure 8 - Placing of the nails at the abut of the binding rufter

S_1 must be more or equal to $15d_{гв}$ = 15·0,3 = 4,5 cm at the thickness of the element of the $c \geq 10d_{гв} = 10 \cdot 0{,}3 = 3$ cm, which is penetrated through.

In our case - the distance between the axes of the nails along the fibers and to the verge of the board is taken equal to 6 cm, which is more than the minimum allowable 4.5 cm, and the thickness of one board is taken with = 4.4 cm, which is also greater than the minimum recommended value 3

The distance between the axes of the nails across the fibers between the nails $S_2 \geq 4d_{гв}$ and the distance from the extreme row of nails to the longitudinal edge of the board $S_3 \geq 4d_{гв}$.

In our case all 5 nails in each row are hammered vertically in equal intervals

It should be taken a $S_2 = S_3 = 2{,}5$ cm wich more than $4d_{гв} = 4 \cdot 0{,}3 = 1{,}2$ cm or 15 cm $= 4S_2 + 2S_3 = 6 \cdot 2{,}5$ cm. \

TASK 6

Calculation of a segment metal-wood truss with glued upper chord

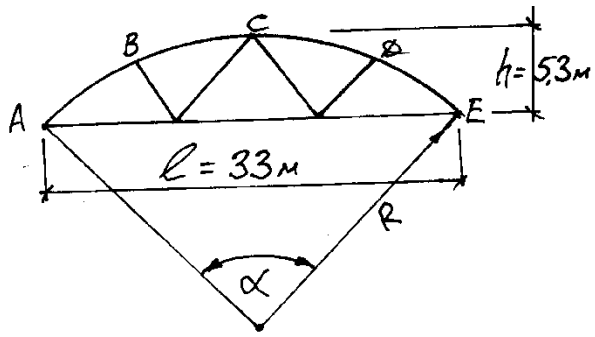

Figure 9 - Scheme of a segment truss

It should be determined the geometric parameters of the truss

$$R = \frac{l^2}{8h} + \frac{h}{2} = \frac{33^2}{8 \cdot 5{,}3} + \frac{5{,}3}{2} = 28{,}34 \text{ m.}$$

$$\sin\frac{\alpha}{2} = \frac{l}{2R} = \frac{33}{2 \cdot 28{,}34} = 0{,}5822.$$

$$\frac{\alpha}{2} = 35^0 36'. \quad \alpha = 71^0 12'.$$

Length of upper chord arch is

$$S = \pi R \cdot \frac{\alpha}{180^0} = \frac{3{,}14 \cdot 28{,}34 \cdot 71^0 12'}{180^0} == 35{,}22 \text{ m.}$$

The upper chord is shared by 4 equal panel. The length of arch of a panel in the upper chord is

$$S_n = \frac{S}{4} = \frac{35{,}22}{4} = 8{,}805 \text{ m.}$$

The length of the chord of each panel (Fig. 10) is

$$d = 2R \cdot \sin\left(\frac{\alpha}{2 \cdot 4}\right) = 2 \cdot 28{,}34 \cdot 0{,}1547 = 8{,}77 \text{ m.}$$

$$AF = FK = KE = 11 \text{ m.}$$

The length of the diagonal rod is

$$BF = KD = \sqrt{4{,}0^2 + 3{,}2^2} = 5{,}122 \text{ m},$$

$$CF = CK = \sqrt{5{,}5^2 + 5{,}3^2} = 7{,}638 \text{ m}.$$

Static calculation of the truss

It should be determine the load, taking into account the curvilinear surface of the roofing

a) of roofing dead load.

$$q^H = \frac{(1{,}27 - 0{,}75)}{1{,}5} \cdot \frac{S}{l} = \frac{0{,}52}{1{,}5} \cdot \frac{35{,}22}{33} = 0{,}37 \text{ kN/m}^2,$$

where 1,27 kN / m is the intensity of the normative running load which is found out at the calculation of the panel

1.5 m is the width of the panel

0,75 kN / m is the weight of the normative snow load on the panel

$$q = \frac{(1{,}80 - 1{,}20)}{1{,}5} \cdot \frac{35{,}22}{33} = 0{,}427 \text{ kN/m}^2,$$

where 1,8 and 1,2 are accordingly the intensity of the total calculated running load on the panel and snow load

b) of the snow load taking into account the cylindrical surface

$$P_c^H = P_0 \cdot C = 0{,}50 \cdot 0{,}7783 = 0{,}3892 \text{ kN/m}^2$$

$$C = \frac{l}{8h} = \frac{33}{8 \cdot 5{,}3} = 0{,}7783.$$

$$P_c = 0{,}3892 \cdot 1{,}6 = 0{,}623 \text{ kN/m}^2,$$

where 1.6 is the cooficient of the safety factor by the load for snow load.

It should be found out the normative daed load of the truss $q_{в.в}^н$ and calculated one $q_{в.в}$

$$q_{в.в}^н = \frac{q^H + P_c^H}{\frac{1000}{k_{с.в} \cdot l} - 1} = \frac{0{,}37 + 0{,}3892}{\frac{1000}{3 \cdot 33} - 1} = 0{,}0834 \text{ kN/m}^2.$$

$$q_{в.в} = 0{,}0834 \cdot 1{,}1 = 0{,}092 \text{ kN/m}^2.$$

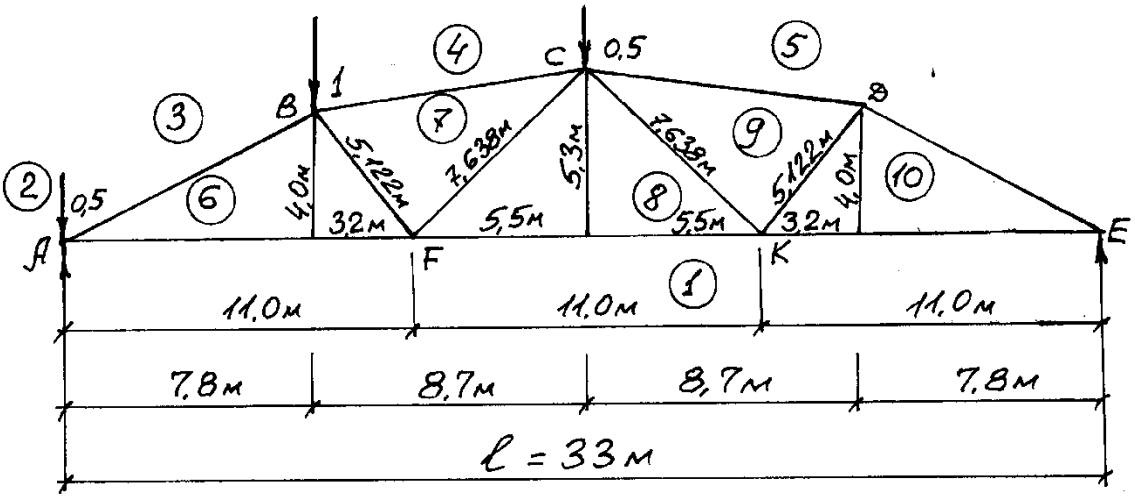

Рис.

Figure 10 - Culculated scheme

It should be determined the load on 1 running m of the truss:

a) of constant load:

$$q = (0{,}427 + 0{,}092) \cdot 5{,}3 = 2{,}751 \text{ kN/m};$$

b) of temporary load

$$P = 0{,}623 \cdot 5{,}3 = 3{,}302 \text{ kN/m},$$

where 5.3 is the distance of the truss.

It should be found out supporting reactions in full load of the truss

$$A_л = A_П = \frac{(2{,}751 + 3{,}302) \cdot 33}{2} = 99{,}88 \text{ kN}.$$

Зусилля в елементах ферми

Element of truss	Number of element	Effort from the unit load, kN			Efforts from constant load (G = = 22,70 kN)	Effort from temporari load ($G_{тимч}$= 27,24 kN)			Calculated effort, kN
		зліва	справа	на всьому прольоті		зліва	справа	на всьому прольоті	
Upper element	3-6	-2,225	-1,125	-3,35	-76,04	-60,61	-30,65	-91,26	-167,30
	4-7	-1,825	-1,26	-3,085	-70,03	-49,72	-34,32	-84,04	-154,07
	5-9	-1,26	-1,825	-3,085	-70,03	-34,32	-49,72	-84,04	-154,07
	5-10	-1,125	-2,225	-3,35	-76,04	-30,65	-60,61	-91,26	-167,30
Lower element	1-6	+2,0	+1,04	+3,04	+69,01	+54,48	+28,33	+82,81	+151,82
	1-8	+1,54	+1,54	+3,08	+69,92	+41,95	+41,95	+83,90	+153,82
	1-10	+1,04	+2,0	+3,04	+69,01	+28,33	+54,48	+82,81	+151,82
diagonal	6-7	-0,36	+0,36	0	0	-9,81	+9,81	0	-9,81
	7-8	+0,43	-0,43	0	0	+11,71	-11,71	0	-11,71
	8-9	-0,43	+0,43	0	0	-11,71	+11,71	0	-11,71
	9-10	+0,36	-0,36	0	0	+9,81	-9,81	-	-9,81

$$\sum y = 0. \qquad R_A + R_B = 2; \quad R_B = 2 - R_A = 2 - 1{,}51 = 0{,}49.$$

It should be determined loading coefficients:

a) for constant load

$$G_{пост} = 2{,}751 \cdot \frac{7{,}8 + 8{,}7}{2} = 22{,}70 \text{ kN};$$

b) for temporary load

$$G_{тимч} = 3{,}302 \cdot \frac{7{,}8 + 8{,}7}{2} = 27{,}24 \text{ kN}.$$

TASK 7
Constructive calculation of the truss

Calculation of the section of upper chord

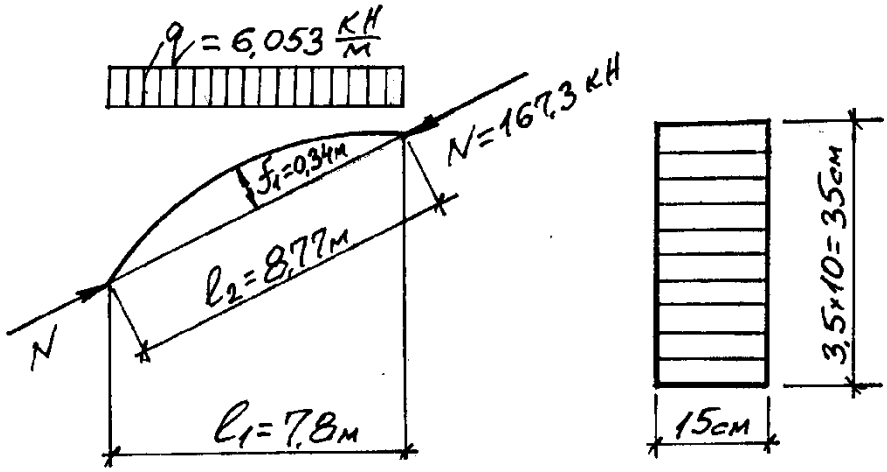

Figure 11 - Calculation scheme and the upper chord section

$$f_1 = \frac{l_2^2}{8R} = \frac{8{,}77^2}{8 \cdot 28{,}34} = 0{,}34 \text{ m};$$

$$M_{розр} = \frac{ql_1^2}{8} - N \cdot f_1 = \frac{6{,}053 \cdot 7{,}8^2}{8} - 167{,}30 \cdot 0{,}34 = 46{,}0331 - 56{,}882 =$$

= -10,85 kN.m.

It should be taken the upper chord section of 10 boards with the 3.5 cm thickness (after planning) with a 35 cm overall total and a 15 cm width. Thus way

$$\frac{h}{b} = \frac{35}{15} = 2{,}33 < 5;$$

$$F = 15 \cdot 35 = 525 \text{ cm}^2;$$

$$W = \frac{15 \cdot 35^2}{6} = 3063{,}5 \text{ cm}^2;$$

$$\lambda_x = \frac{l_2}{r} = \frac{877}{0{,}289 \cdot 35} = 86{,}7;$$

$$\varphi_x = \frac{3000}{\lambda_x^2} = \frac{3000}{86{,}7^2} = 0{,}399;$$

$$\xi = 1 - \frac{N}{\varphi \cdot F_{\delta p} \cdot R_c} = 1 - \frac{16730}{0{,}399 \cdot 525 \cdot 150} = 0{,}467,$$

where $R_c = 1{,}5\,\text{kN / cm}^2$ is the calculated resistance of the compression wood.

It should be found tension in the upper chord section

$$\sigma = \frac{N}{F_{HT}} + \frac{M}{\xi \cdot W_{HT}} = \frac{167{,}30}{525} + \frac{10{,}85 \cdot 10^2}{0{,}467 \cdot 3062{,}5} =$$

$$= 0{,}31866 + 0{,}75856 = 1{,}0773 \text{ kN/cm}^2 < R_в = 1{,}50 \text{ kN/cm}^2,$$

thus the condition of strength is satisfied.

TASK 8
Calculation of the lower chord section

Calculated effort in the lower chord $N_p = 153{,}82$ kN;

$$F_H = \frac{N_p}{R} = \frac{153{,}82}{21{,}00} = 7{,}32 \text{ cm}^2.$$

According to the condition of extreme flexibility in the vertical flatness it should be taken

$2\angle 90 \times 7$ з $F = 2 \cdot 12{,}3 = 24{,}6$ cm^2.

Weight of 1 running . m is 0,0984 kg x 2 = 0,1968 kg

$J_x = 94{,}3$ cm^4, $r_x = 2{,}77$ cm, $z_0 = 2{,}47$ cm.

Flexibility in the vertical flatness is

$$\lambda_x = \frac{1100}{2{,}77} = 397{,}1 < \lambda_{пр} = 400.$$

$$W_{\min} = \frac{J_x}{h - z_0} = \frac{94{,}3}{9 - 2{,}47} = 14{,}44 \text{ cm}^3.$$

Bending moment of dead load

$$M_H = \frac{q_{в.в.} \cdot d^2}{8} = \frac{0{,}1968 \cdot 11^2}{8} = 2{,}977 \text{ kN.m.}$$

Tension in the lower chord

$$\sigma = \frac{N}{F} + \frac{M}{W} = \frac{153{,}82}{24{,}6} + \frac{297{,}70}{14{,}44} = 20{,}96 \text{ kN / cm}^2 < R = 21{,}0 \text{ kN / cm}^2.$$

TASK 9
Selection of diagonal rod sections

It should be take the diagonal rods with the same cross section to unify

The section is selected according to extreme flexibility

Розкіс 7-8 $l_0 = 763{,}8$ cm, N = -11,71 kN, $\lambda_{гр} = 150$.

diagonal rods 7-8 $l_0 = 763{,}8$ cm, N = -11,71 kN, $\lambda_{гр} = 150$.

It should be found out the height of the section

$$h = \frac{l_0}{0{,}289 \cdot \lambda_{гр}} = \frac{763{,}8}{0{,}289 \cdot 150} = 17{,}7 \text{ cm.}$$

It should be taken diagonal rods wiith section

$$\lambda_x = \frac{l_0}{0{,}289 \cdot h} = \frac{763{,}8}{0{,}289 \cdot 20} = 133;$$

$$\varphi_x = \frac{3000}{\lambda_x^2} = \frac{3000}{133^2} = 0{,}169.$$

It should be checked the tension in the diagonal rod:

$$\sigma = \frac{N}{\varphi_x \cdot F_{розр}} = \frac{11{,}71}{0{,}169 \cdot 300} = 0{,}231 \text{ kN/cm}^2,$$

$$R_c = 1{,}50 \text{ kN/cm}^2.$$

TASK 10
Calculation of the supporting junction

The junction is carried out in the form of chock welded by steel sheets

The upper chord leans in a ribbed slab welded to the sides of the chock

The lower chord is attached to the sides of the chock with welds.

It should be determined the supporting area of the butt of the upper chord on the chock's slab according to the condition of pressed wood.

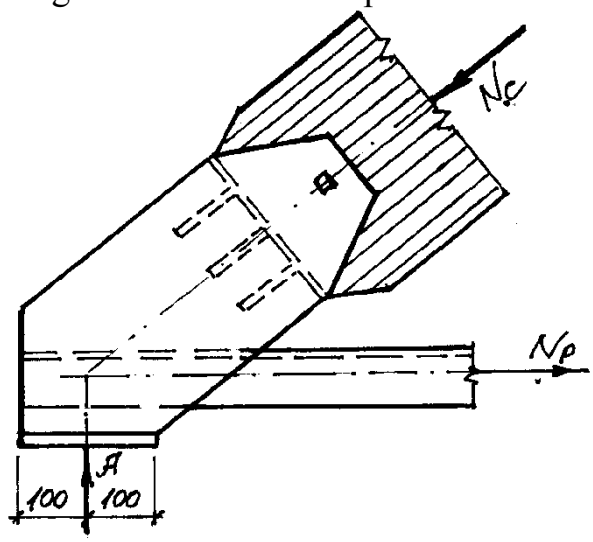

Figure 12 - Supporting junction of the truss

$$F_{зім} = \frac{N}{R_{зім}} = \frac{167{,}30}{1{,}50} = 112 \text{ cm}^2.$$

Length of the slab $l_n = \frac{F}{b} = \frac{112}{15} = 7{,}5$ cm,

where b = 15 cm is the width of the upper chord section accepted previously

The supporting slab is calculated as a contour, leaned on four sides Load on the slab

$$\sigma_{зім} = \frac{N}{R_{зім}} = \frac{167{,}30}{20 \cdot 15} = 0{,}558 \text{ kN/cm}^2;$$

$$M = \alpha_1 \sigma_{зім} \cdot a^2 = 0{,}1 \cdot 0{,}558 \cdot \left(\frac{15}{2}\right)^2 = 3{,}14 \text{ kN.cm},$$

де $\frac{b}{a} = \frac{15}{7{,}5} = 2.$ $\alpha_1 = 0{,}1$.

$$W = \frac{M}{R} = \frac{3{,}14}{21{,}00} = 0{,}15 \text{ cm}^3.$$

The thickness of the slab $\delta_{пл} = \sqrt{6W} = \sqrt{6 \cdot 0{,}15} = 0{,}948$ cm.

It should be taken $\delta_{пл} = 1{,}0$ cm.

It should be checked the ribbed slab as a beam with span which is equal to the distance between the axes of the chock side

$$M = \frac{0{,}558 \cdot 20(15+1)^2}{8} = 357{,}12 \text{ kN.cm}.$$

Distance from edge to the center of section of the weight

$$y = \frac{20 \cdot 1{,}0 \cdot 0{,}5 + 8{,}0 \cdot 1{,}0 \cdot 5}{20 \cdot 1 + 8 \cdot 1} = 1{,}786 \text{ cm}.$$

Moment of the section inertia

$$J_x = \frac{20 \cdot 1^3}{12} + \frac{1 \cdot 8^3}{12} + 20(1{,}786 - 0{,}5)^2 + 24(5 - 1{,}786)^2 = 285 \text{ cm}^4.$$

Thus

$$\sigma = \frac{M(h-y)}{J_x} = \frac{357{,}12(9 - 1{,}786)}{285} = 9{,}04 \text{ kN/cm}^2 < R_u = 21{,}00 \text{ kN/cm}^2,$$

so, the condition of strength has been done

TASK 11
Determine the dimensions of the supporting slab

It should be taken dimension of the supporting slab 20 x 30 cm according to condition of the anchor bolts leaning and fixing

Tension of compression under the slab

$$\sigma = \frac{A}{F_{пл}} = \frac{99{,}88}{20 \cdot 30} = 0{,}1665 \text{ kN/cm}^2,$$

where A is the supporting reaction of the truss.

The thickness of the slab is determined according to the condition of its bending in different areas

Console section of the slab

$$M_1 = \frac{0{,}1665 \cdot 6{,}5^2}{2} = 0{,}88 \text{ kN.cm}.$$

The middle section of the slab

$$M_2 = \frac{0{,}1665 \cdot (15+1)^2}{8} = 5{,}33 \text{ kN.cm.}$$

The moment of resistance is found by the bending moment for the middle section of the slab , that is, its greater value

$$W = \frac{M_{\max}}{R} = \frac{5{,}33}{21{,}00} = 0{,}254 \text{ cm}^3.$$

The thickness of the slab $\delta_{пл} = \sqrt{6W} = \sqrt{6 \cdot 0{,}254} = 1{,}24$ cm.

It should be taken $\delta_{пл} = 2{,}0$ cm.

It should be determined the length of the welds that fix the angle piece of lower chord to the supporting junction

$$l_ш = \frac{N}{R_y^{зв} \cdot 2h_ш \cdot m_{зв}} = \frac{151{,}82}{15{,}00 \cdot 2 \cdot 0{,}5 \cdot 0{,}7} = 14{,}46 \text{ cm.}$$

It should be taken $l_ш^{об} = 16 \cdot 0{,}7 + 1 = 13$ cm, у пера $l_ш^{п} = 10$ cm.

Elements of a chock are welded by seam $h_ш = 8$ mm

It should not be checked because of the strength reserve

TASK 12

Intermediate junctions of the upper chord

It should be are established welded steel chock with sizes 20 x 15 cm to transfer the efforts of chords and fix diagonal rods.

Tension of wood pressed is not checked because the size of the chock is the same as the support slab in the supporting junctions

Between slabs of chock the ribs of rigidity should be fixed

The slab is checked for bending

$$M = \frac{\sigma_{зім} \cdot l^2}{8} = \frac{0{,}558 \cdot 4{,}8^2}{8} = 1{,}61 \text{ kN.cm;}$$

$$W = \frac{1{,}61}{21{,}00} = 0{,}076 \text{ cm}^3;$$

$$\delta_{пл} = \sqrt{6W} = \sqrt{6 \cdot 0{,}076} = 0{,}68 \text{ cm.}$$

It should be taken $\delta = 10$ mm.

It should be taken junctions bolts constructively with diameter d = 2 cm., the diagonal rods are attached to them , and they have insignificant forces,

Diagonal rods are attached to the junctions with steel onlay with sections of 80 x 8 mm.

The onlay are fixed with two bolts with d = 16 mm.

It should be checked the steel onlay

a) on a stretch in a section weakened by central bolt:

$$\sigma = \frac{N}{F_{НТ}} = \frac{11{,}71}{9{,}6} = 1{,}22 \text{ kN/cm}^2 < R = 21{,}00 \text{ kN/cm}^2.$$

$F_{HT} = 2 \cdot 0{,}8 \cdot (8-2) = 9{,}6$ cm^2;

b) compression on the stability of the slab plane

$$\sigma = \frac{N}{\varphi \cdot F_{бр}} = \frac{11{,}71}{0{,}133 \cdot 12{,}8} = 6{,}88 \text{ kN/cm}^2 < R = 21{,}00 \text{ kN/cm}^2;$$

$$\lambda = \frac{l_0}{r} = \frac{35}{0{,}289 \cdot 0{,}8} = 150;$$

$$\varphi = \frac{3000}{150^2} = 0{,}133.$$

$$F_{бр} = 2 \cdot 0{,}8 \cdot 8 = 12{,}8 \text{ cm}^2.$$

It should be determine the bearing capacity of one two-way bolt

by bending the bolt $T_в = 2{,}50 \cdot d^2 = 2{,}50 \cdot 1{,}6^2 = 6{,}40$ kN;

by the pressing of wood $T_c = 0{,}50cd = 0{,}50 \cdot 15 \cdot 1{,}6 = 12{,}00$ kN.

It should be found the number of bolts by bending the bolt

$$n = \frac{N_{\max}}{n_{зр} \cdot T_{\min}} = \frac{11{,}71}{2 \cdot 6{,}40} = 0{,}92 \text{ pcs}$$

It should be taken constructively 2 bolts

Appendix 1

Table 1

Stressed state and characteristics of the elements	Позначення indication	Розрахункові опори, MPa для сортів дере вини кгс/cm2 Culculated supports, MPa for chops of wood kgf / cm2		
		1	2	3
1. Bending, compression and stiffening along fibres:				
a) elements of a rectangular section (except specified ones in sub-paragraphs "b", "c") in height up to 50 cm;	$R_в$, R_c, $R_{зім}$	14/140	13/130	8,5/85
b) elements of a rectangular section from 11 to 13 cm wide with a section height of 11 to 50 cm;	$R_в$, R_c, $R_{зім}$	15/150	14/140	10/100
c) elements of a rectangular section with width more than 13 cm at a section height of 13 to 50 cm;	$R_в$, R_c, $R_{зім}$	16/160	15/150	11/110
d) elements of round logging materials without cutting in the calculated section.	$R_в$, R_c, $R_{зім}$	-	16/160	10/100
2. Stretching along the fibers				
a) non-glued elements	R_P	10/100	7/70	-
b) glued elements	R_P	12/120	9/90	-
3. Compression and pressing of the surface across the fibers				
a) in the supporting parts of the structure, frontal joggle, and juncted connection of the elements	$R_{зім90}$	3/30	3/30	3/30
b) under washers at angle of abrasion from 90 to 600	$R_{зім90}$	4/40	4/40	4/40
4. Stretching the element of glued timber across the fibers	R_{P90}	0,35/3,5	0,3/3	0,25/2,5

Note 1. In the building construction , the values of the calculated resistance to stretch,are taken according to paragraph 2a of this table, and it must be reduced by 30%.

Note 2. The calculated resistance of the bend for the elements of the covering roof lather and the lat for the roof of the 3rd chop wood should be taken at 13 MPa (130 kgf / cm^2).

REFERENCES

1. Konstruktsii iz dereva i plastmass. / Slitskouhov Yu.V. i dr. - M.: Stroyizdat, 1986. - 543 s.
2. Konstruktsii iz dereva i plastmass. / Ivanov V.A., Klimenko V.Z. - Kiev.: Vischa shkola, 1983. - 279 s.
3. Konstruktsii iz dereva i plastmass. Primeryi rascheta i konstruirovaniya. / Ivanov V.A. i dr.- Kiev: Vischa shkola, 1981. - 391 s.
4. Grin I.M. Stroitelnyie konstruktsii iz dereva i sinteticheskih materialov. Proektirovanie i raschet. - Kiev: Vischa shkola, 1975. - 280 s.
5. DBN V.1.2-2:2006. Normyi proektirovaniya. Nagruzki i vozdeystviya.
6. DBN . Derevyannyie konstruktsii
7. SNiP II 25-80. Derevyannyie konstruktsii. Normyi proektirovaniya. - M.: Gosstroy SSSR, 1982. - 65 s.
8. SNiP II 23-81*. Stalnyie konstruktsii. Normyi proektirovaniya. - M.: Gosstroy SSSR, 1988. - 96 s.
9. Popelnuh V.M. Osnovi proektuvannya konstruktsIy z dereva I plastmas: Teksti lektsIy dlya studentIv budIvelnih spetsIalnostey. – Kharkiv: HDAMG, 2002. – 124 s.
10. Popelnuh V.M. KonstruktsIYi z dereva I plastmas: Konspekt lektsIy dlya studentIv budIvelnih spetsIalnostey. – HarkIv: HDAMG, 2003. – 104 s.
11. Popelnuh V.M., Lugchenko O.I. KontrolnI pitannya I golovnI zadachI kursu «KonstruktsIYi z dereva I plastmas». – Kharkiv: HDAMG, 2005. – 85 s.

Виробничо-практичне видання

Методичні рекомендації
до проведення практичних занять та самостійної роботи
з навчальної дисципліни

«ДЕРЕВ'ЯНІ КОНСТРУКЦІЇ»

(*для студентів 3 курсу денної та заочної форм навчання,
та слухачів другої вищої освіти,
спеціальності 192 – Будівництво та цивільна інженерія,
професійне спрямування «Промислове і цивільне будівництво»)*

(Англ. мовою)

Укладачі: **ПУСТОВОЙТОВА** Оксана Михайлівна
ЗОЛОТОВ Сергій Михайлович

Редактор *О. В. Михаленко*
Комп'ютерне верстання *О. М. Пустовойтова*

План 2018 , поз. 471М

Підп. до друку 04.04.2018. Формат 60 × 84/16
Друк на ризографі. Ум. друк. арк. 1,0
Тираж 50 пр. Зам. №

Видавець і виготовлювач:
Харківський національний університет
міського господарства імені О. М. Бекетова
вул. Маршала Бажанова, 17, Харків, 61002.
Електронна адреса: rectorat@kname.edu.ua
Свідоцтво суб'єкта видавничої справи:
ДК № 5328 від 11.04.2017.