Home task

1. At what value of m vectors $\vec{a} = m\vec{i} + 3\vec{j} + 4\vec{k}$ and $\vec{b} = 4\vec{i} + m\vec{j} - 7\vec{k}$ are perpendicular.
2. Find $\left(2\vec{a} + 4\vec{b}\right) \cdot \left(2\vec{a} - \vec{b}\right)$, if $\left|\vec{a}\right| = \left|\vec{b}\right| = 2$; $\vec{a} \perp \vec{b}$.
3. Show that the vectors $\vec{a} = \vec{i} + \vec{j} + m\vec{k}$; $\vec{b} = \vec{i} + \vec{j} + (m+1)\vec{k}$; $\vec{c} = \vec{i} - \vec{j} + m\vec{k}$ can not be complanar at any value of m.
4. Find the vector product of the vectors $\vec{a} = -\vec{i} + 2\vec{j} - \vec{k}$ and $\vec{b} = 2\vec{i} - \vec{j} + 2\vec{k}$.
5. Calculate the volume of the triangle of the pyramid with the apexes $A(1;0;0)$; $B(0;1;2)$; $C(0;0;5)$; $D(-4;2;2)$.
6. Find the mixed product of the orts $\vec{i}\vec{j}\vec{k}$.

8. ANALYTICAL GEOMETRY IN SPACE

8.1. Plane in the space

Equation of the plane in vector form is presented as follows:

$$\vec{r} \cdot \vec{n} = \rho,$$

where $\vec{r} = x\vec{i} + y\vec{j} + z\vec{k}$ – is radius–vector of the current point of the plane, $M(x, y, z)$; $\vec{n} = \vec{i}\cos\alpha + \vec{j}\cos\beta + \vec{k}\cos\gamma$ – is a unique vector of normality, drawn from the beginning of coordinates; α, β, γ – angles made by this normality with the axes of coordinates; ρ – is a length of this normality – a distance from the beginning of coordinates to the plane.

In coordinate form plane equation is presented as follows:

$$x\cos\alpha + y\cos\beta + z\cos\gamma - \rho = 0$$

and is called a normal plane equation.

Common plane equation is presented as follows:

$Ax + By + Cz + D = 0$ under the condition $A^2 + B^2 + C^2 \neq 0$. Here A, B, C – are vector coordinates $\vec{N} = A\vec{i} + B\vec{j} + C\vec{k}$, are perpendicular to the plane.

Common equation of surface can be redacted to the normal, multiplying all

its terms by normalize multiplier $\mu = \pm\frac{1}{N} = \pm\frac{1}{\sqrt{A^2+B^2+C^2}}$. Normalize multiplier sigh is opposite to the sigh of absolute term D.

If a surface doesn't go through the beginning of coordinates, i.d. $D \neq 0$, having divided common equation into D, we will get a plane equation in sections: $\frac{x}{a}+\frac{y}{b}+\frac{z}{c}=1$, where $a=-\frac{D}{A}$, $b=-\frac{D}{B}$, $c=-\frac{D}{C}$ – are sections, cut by the surface on the coordinate axes.

Angle φ between two surfaces $A_1x+B_1y+C_1z+D_1=0$ and $A_2x+B_2y+C_2z+D_2=0$ is defined as an angle between normalities to these surfaces according to the formula

$$\cos\varphi = \frac{A_1A_2+B_1B_2+C_1C_2}{\sqrt{A_1^2+B_1^2+C_1^2}\cdot\sqrt{A_2^2+B_2^2+C_2^2}}.$$

Condition of plane parallelity:

$$\frac{A_1}{A_2}=\frac{B_1}{B_2}=\frac{C_1}{C_2}.$$

Condition of plane perpendicularity:

$$A_1A_2+B_1B_2+C_1C_2=0.$$

Distance between point $M(x_0,y_0,z_0)$ and plane $Ax+By+Cz+D=0$ is calculated according to the formula

$$d=\frac{|Ax_0+By_0+Cz_0+D|}{\sqrt{A^2+B^2+C^2}}.$$

Plane equation going through point $M(x_0,y_0,z_0)$ and perpendicular to the vector $\vec{N}=A\vec{i}+B\vec{j}+C\vec{k}$, is presented as follows:

$$A(x-x_0)+B(y-y_0)+C(z-z_0)=0.$$

At any A, B, C this equation defines the bundle of planes going through point $M(x_0,y_0,z_0)$.

Intersection of two planes $A_1x+B_1y+C_1z+D_1=0$ and $A_2x+B_2y+C_2z+D_2=0$ defines a straight line in space. And equation $A_1x+B_1y+C_1z+D_1+\lambda(A_2x+B_2y+C_2z+D_2)=0$ is called an equation of pencil of planes going through this straight line.

Plane equation going through three given points $M_1(\vec{r}_1)$, $M_2(\vec{r}_2)$, $M_3(\vec{r}_3)$, where $\vec{r}_1 = x_1\vec{i} + y_1\vec{j} + z_1\vec{k}$, $\vec{r}_2 = x_2\vec{i} + y_2\vec{j} + z_2\vec{k}$, $\vec{r}_3 = x_3\vec{i} + y_3\vec{j} + z_3\vec{k}$ – are radius – vectors of points M_1, M_2, M_3, is defined by equation

$$(\vec{r} - \vec{r}_1)(\vec{r} - \vec{r}_2)(\vec{r} - \vec{r}_3) = 0$$

or in coordinate form

$$\begin{vmatrix} x - x_1 & y - y_1 & z - z_1 \\ x_2 - x_1 & y_2 - y_1 & z_2 - z_1 \\ x_3 - x_1 & y_3 - y_1 & z_3 - z_1 \end{vmatrix} = 0.$$

Let's consider the following examples

Example. To transform to the normal form of plane equation $x + 2y - 2z + 9 = 0$.

Solution. Let's calculate normalize multiplier $\mu = -\frac{1}{\sqrt{1+4+4}} = -\frac{1}{3}$. Sigh "minus" is chosen because $D = 9 > 0$. Then normal plane equation is presented as follows:

$$\left(-\frac{1}{3}\right)x + \frac{2}{3}y + \frac{2}{3}z - 3 = 0.$$

Here $\cos\alpha = -\frac{1}{3}$; $\cos\beta = \frac{2}{3}$; $\cos\gamma = \frac{2}{3}$; $\rho = 3$.

The distance from the beginning of coordinates to the plane is equal to 3.

Example. To make up a plane equation going through the point $M(1;2;3)$ perpendicularly to vector $\vec{N} = 2\vec{i} - 3\vec{j} + 4\vec{k}$.

Solution. Let's use the plane equation going through the given point $M(x_0, y_0, z_0)$ perpendicularly to the given vector $\vec{N} = A\vec{i} + B\vec{j} + C\vec{k}$,

$A(x - x_0) + B(y - y_0) + C(z - z_0) = 0$.

$$2(x-1) + (-3)(y-2) + 4(z-3) = 0$$

$$x - 2 - 3y + 6 + 4z - 12 = 0.$$

$$x - 3y + 4z - 8 = 0.$$

Example. To calculate the length of perpendicular, dropped from the $M(3;5;-2)$ onto the plane $2x + 2y - z - 9 = 0$.

Solution. This task is to calculate the distance from the point $M(x_0, y_0, z_0)$ to the plane $Ax + By + Cz + D = 0$

$$d = \frac{|Ax_0 + By_0 + Cz_0 + D|}{\sqrt{A^2 + B^2 + C^2}} = \frac{|2 \cdot 3 + 2 \cdot 5 + (-1) \cdot (-2)|}{\sqrt{4+4+1}} = \frac{|6+10+2-9|}{3} = 3.$$

Example. To make up a plane equation going through the straight line of plane intersection $4x + y + z - 2 = 0$, $3x + 2y - z + 3 = 0$ and a point $M(1;2;3)$.

Solution. Let's use the pencil of planes equation

$$4x + y + z - 2 + \lambda(3x + 2y - z + 3) = 0.$$

Let's define λ from the condition that point M coordinates make this equation into identity.

$$4 \cdot 1 + \cancel{2} + 3 - \cancel{2} + \lambda(3 \cdot 1 + 2 \cdot 2 - \cancel{3} + \cancel{3}) = 0$$

$$7 + 7\lambda = 0 \quad \lambda = -1$$

and finally we are obtaining

$$4x + y + z - 2 - 3x - 2y + z - 3 = 0$$

$$x - y + 2z - 5 = 0.$$

Example. To make up a plane equation going through the point $M(1;-1;-2)$ and perpendicular to the planes $2x - y + z + 4 = 0$ and $x - 3y + 2z + 1 = 0$.

Solution. As a vector of normality of the searched lane let's take a vector perpendicular to the vectors of normality of the given planes, and this is a vector product of these vectors $\vec{N} = \vec{N}_1 \times \vec{N}_2$, where $\vec{N}_1 = 2\vec{i} - \vec{j} + \vec{k}$; $\vec{N}_2 = 3\vec{i} - 3\vec{j} + 2\vec{k}$.

$$\vec{N} = \begin{vmatrix} \vec{i} & \vec{j} & \vec{k} \\ 2 & -1 & 1 \\ 3 & -3 & 2 \end{vmatrix} = \vec{i}\begin{vmatrix} -1 & 1 \\ -3 & 2 \end{vmatrix} - \vec{j}\begin{vmatrix} 2 & 1 \\ 3 & 2 \end{vmatrix} + \vec{k}\begin{vmatrix} 2 & -1 \\ 3 & -3 \end{vmatrix} = \vec{i} - \vec{j} - 3\vec{k}.$$

Further let's use a plane equation going through the point $M(1;-1;-2)$ perpendicularity to the vector $\vec{N} = \vec{i} - \vec{j} - 3\vec{k}$

$$(x-1) + (-1)(y+1) + (-3)(z+2) = 0 \text{ or } x - y - 3z - 8 = 0.$$

Example. From point $M(2;4;3)$ dropped perpendiculars on the coordinate axes. Let's make up a plane equation going through the basis of these perpendiculars.

Solution. The basis of these perpendiculars are coordinates of point M, i.e. it's necessary to make up a plane equation, cut sections on the axes correspondingly 2, 4 and 3. Let's use equation of the plane on the sections

$\frac{x}{a}+\frac{y}{b}+\frac{z}{c}=1$, then $\frac{x}{2}+\frac{y}{4}+\frac{z}{3}=1$ is a searched equation.

8.2. Straight line in space

Straight line in space can be assigned by the equations of two planes $A_1x+B_1y+C_1z+D_1=0$ and $A_2x+B_2y+C_2z+D_2=0$, crossing on it.

Equation of a straight line going through two points $M_1(x_1;y_1;z_1)$ and $M_2(x_2;y_2;z_2)$

$$\frac{x-x_1}{x_2-x_1}=\frac{y-y_1}{y_2-y_1}=\frac{z-z_1}{z_2-z_1}.$$

Canonical equation of the straight line $\frac{x-x_1}{l}=\frac{y-y_1}{m}=\frac{z-z_1}{n}$ defines the line going through the point $M_1(x_1;y_1;z_1)$ and is parallel to vector $\vec{s}=l\vec{i}+m\vec{j}+n\vec{k}$. These equations can be presented in the following way

$$\frac{x-x_1}{\cos\alpha}=\frac{y-y_1}{\cos\beta}=\frac{z-z_1}{\cos\gamma},$$

where α, β and γ – are angles made up by the line with the axes of coordinate. Directing cosines of the line are calculated according to the formula:

$$\cos\alpha=\frac{l}{\sqrt{l^2+m^2+n^2}};\ \cos\beta=\frac{m}{\sqrt{l^2+m^2+n^2}};\ \cos\gamma=\frac{n}{\sqrt{l^2+m^2+n^2}}.$$

From the canonical equation of the straight line, using parameter *t*, let's go to the parametric equations:

$$\begin{cases} x=lt+x_1 \\ y=mt+y_1 \\ z=nt+z_1 \end{cases}.$$

The angle between two straight lines assigned by their canonical equation $\frac{x-x_1}{l_1}=\frac{y-y_1}{m_1}=\frac{z-z_1}{n_1}$ и $\frac{x-x_1}{l_2}=\frac{y-y_1}{m_2}=\frac{z-z_1}{n_2}$ is calculated according to the

formula $\cos\varphi = \dfrac{l_1 l_2 + m_1 m_2 + n_1 n_2}{\sqrt{l_1^2 + m_1^2 + n_1^2}\sqrt{l_2^2 + m_2^2 + n_2^2}}$.

Then the condition of two lines parallelity:

$$\frac{l_1}{l_2} = \frac{m_1}{m_2} = \frac{n_1}{n_2},$$

and the condition of perpendicularity:

$$l_1 l_2 + m_1 m_2 + n_1 n_2 = 0.$$

Necessary and sufficient condition of two lines calculation assigned by their canonical equations in one plane (condition of complanarity):

$$\begin{vmatrix} x_2 - x_1 & y_2 - y_1 & z_2 - z_1 \\ l_1 & m_1 & n_1 \\ l_2 & m_2 & n_2 \end{vmatrix} = 0.$$

If quantity l_1, m_1, n_1 are not proportional to quantities l_2, m_2, n_2, then the given relation is necessary and sufficient condition of two lines intersection in space.

Angle between a line $\dfrac{x - x_1}{l} = \dfrac{y - y_1}{m} = \dfrac{z - z_1}{n}$ and a plane $Ax + By + Cz + D = 0$ are to the formula

$$\sin\varphi = \frac{Al + Bm + Cn}{\sqrt{A^2 + B^2 + C^2}\sqrt{l^2 + m^2 + n^2}};$$

the parallelity condition of a straight line and surface:

$$Al + Bm + Cn = 0;$$

The perpendicularity condition of a straight line and surface:

$$\frac{A}{l} = \frac{B}{m} = \frac{C}{n}.$$

For calculating a point of the straight line intersection $\dfrac{x - x_0}{l} = \dfrac{y - y_0}{m} = \dfrac{z - z_0}{n}$ with the plane $Ax + By + Cz + D = 0$ it's necessary to solve their equation compatibly, thus one should use parametric equation of the line $x = lt + x_0$, $y = mt + y_0$, $z = nt + z_0$:

if $Al + Bm + Cn \neq 0$, then the line crosses the plane;

if $Al + Bm + Cn = 0$ and $Ax_0 + By_0 + Cz_0 + D \neq 0$, then the line is parallel to the

plane;

if $Al+Bm+Cn=0$ and $Ax_0+By_0+Cz_0+D=0$, then the line lies on the plane.

Let's consider the examples.

Example. The straight line is assigned by the planes intersection $x-y+3z-2=0$ and $x+2y-z-6=0$. Let's make up it's canonical equation.

Solution. Each of planes has its vector of normality $\vec{N}_1=\vec{i}-\vec{j}+3\vec{k}$, $\vec{N}_2=3\vec{i}+2\vec{j}-\vec{k}$. The searched line goes along the vector $\vec{s}=l\vec{i}+m\vec{j}+n\vec{k}$, which is perpendicular to $\vec{N}_1$ and $\vec{N}_2$.

$$\vec{s}=\vec{N}_1\times\vec{N}_2=\begin{vmatrix}\vec{i} & \vec{j} & \vec{k}\\ 1 & -1 & 3\\ 3 & 2 & -1\end{vmatrix}=\vec{i}\begin{vmatrix}-1 & 3\\ 2 & -1\end{vmatrix}-\vec{j}\begin{vmatrix}1 & 3\\ 3 & -1\end{vmatrix}+\vec{k}\begin{vmatrix}1 & -1\\ 3 & 2\end{vmatrix}=-5\vec{i}+10\vec{j}+5\vec{k}.$$

Let's find a point through which a searched straight line is going. It's more simple to do it, crossing this straight line with one of the coordinate planes, let's say yOz, then $x=0$ and

$$\begin{cases}-y+3z-2=0 \\ 2y-z-6=0\end{cases}\begin{vmatrix}2\\ +\end{vmatrix}\begin{vmatrix}+\\ 3\end{vmatrix}$$

$$5z-10=0,\quad z=2$$
$$5y-20=0,\quad y=4.$$

Let's write down a canonical equation of a straight line, going through the point $M(0;4;2)$, parallelly to vector $\vec{s}=-5\vec{i}+10\vec{j}+5\vec{k}$:

$$\frac{x}{-5}=\frac{y-4}{10}=\frac{z-2}{5}\quad\text{or}\quad\frac{x}{-1}=\frac{y-4}{2}=\frac{z-2}{1}.$$

This task can be solved easier.

Firstly expelling y, then z, from the plane equation, we will obtain:

$$\begin{cases}x-y+3z-2=0 \\ 3x+2y-z-6=0\end{cases}\begin{vmatrix}2\\ +\end{vmatrix}\begin{vmatrix}+\\ 3\end{vmatrix}$$

$$5x+5z-10=0,\quad -5x=5z-10;\ -10x=10(z-2).$$

$$10x+5y-20=0,\quad -10x=5y-20;\ -10x=5(y-4).$$

$$-10x=5(y-4)=10(z-2)\ \text{ or }\ \frac{x}{-1}=\frac{y-4}{2}=\frac{z-2}{1}.$$

Example. The given plane $x+2y-z-8=0$ and a point $M(1;2;3)$ out side it. Let's find point N, symmetric to point M relatively to the given plane.

Solution. The equation of a straight line going through the point $M(1;2;3)$ perpendicular to the surface with the vector of normality $\vec{N}=\vec{i}+2\vec{j}-\vec{k}$ is presented as follows:

$$\frac{x-1}{1}=\frac{y-2}{2}=\frac{z-3}{-1}.$$

For calculating a point of intersection of this straight line with the plane, let's write down its equation in parametric form: $\frac{x-1}{1}=\frac{y-2}{2}=\frac{z-3}{-1}=t$

$$\begin{cases} x=t+1 \\ y=2t+2. \\ z=-t+3 \end{cases}$$

Put x, y, z into the plane equation, let's find the notion of parameter t, and coordinates of intersection points

$$t+1+4t+4+t-3-8=0,\ 6t=6,\quad t=1.$$

Then $x=2,\ y=4,\ z=2$ – are coordinates of intersection point of the straight line with the plane.

Coordinates of a searched point N, are a medium of section with a help of coordinate formula:

$$\overline{x}=\frac{x_M+x_N}{2};\ \overline{y}=\frac{y_M+y_N}{2};\ \overline{z}=\frac{z_M+z_N}{2};$$

$$2=\frac{1+x_N}{2};\ 4=\frac{2+y_N}{2};\ 2=\frac{3+z_N}{2};$$

$$x_N=3;\ y_N=6;\ z_N=1.$$

Then $N(3;6;1)$.

Example. To calculate angles made up with the axes of coordinates of the straight line

$$\begin{cases} x-2y-5=0 \\ x-3z+8=0 \end{cases}.$$

Solution. Let's make up a canonical equation of the straight line

$x=2y+5$, $x=3z-8$,

$x=2y+5=3z-8$, $x=2\left(y+\frac{5}{2}\right)=3\left(z-\frac{8}{3}\right)$,

$$\frac{x}{6}=\frac{y+\frac{5}{2}}{3}=\frac{z-\frac{8}{3}}{2}$$

$l=6$; $m=3$; $n=2$; $\vec{s}=6\vec{i}+3\vec{j}+2\vec{k}$.

Then

$$\cos\alpha=\frac{l}{\sqrt{l^2+m^2+n^2}}=\frac{6}{\sqrt{36+9+4}}=\frac{6}{7};$$

$$\cos\beta=\frac{m}{\sqrt{l^2+m^2+n^2}}=\frac{3}{7};\ \cos\gamma=\frac{n}{\sqrt{l^2+m^2+n^2}}=\frac{2}{7}.$$

8.3. Surfaces of the second order. Review.

Sphere. Equation of radius R sphere with the centre in the point $C(x_0, y_0, z_0)$ in Cartisian's system of coordinates is presented as (Fig.13):

$$(x-x_0)^2+(y-y_0)^2+(z-z_0)^2=R^2.$$

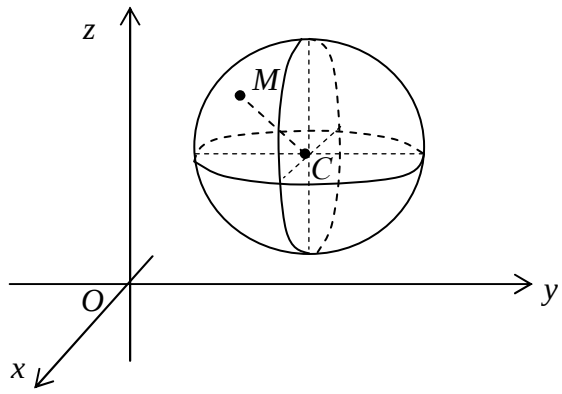

Fig.13

If the centre of the sphere is in the beginning of coordinate, then $x^2+y^2+z^2=R^2$.

The equation of the form $F(x,y)=0$ in the surface defines cylindric surface which generator is parallel to Oz axis. For $F(x,z)=0-$ a generator parallel to Oy axis. For $F(y,z)=0$ – a generator is parallel to Ox axis.

Canonical equations of cylinders of the second order is presented as follows.

Elliptic cylinder $\frac{x^2}{a^2}+\frac{y^2}{b^2}=1$ (Fig. 14)

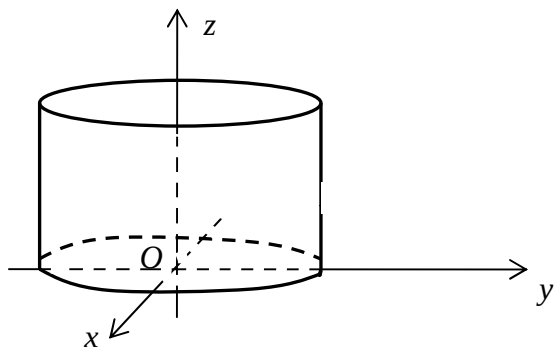

Fig.14

Hyperbolic cylinder $\frac{x^2}{a^2}-\frac{y^2}{b^2}=1$ (Fig. 15)

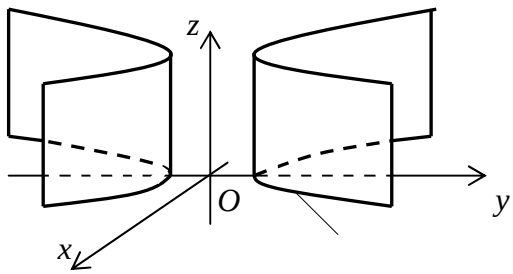

Fig.15

Parabolic cylinder $y^2=2px$ (Fig. 16)

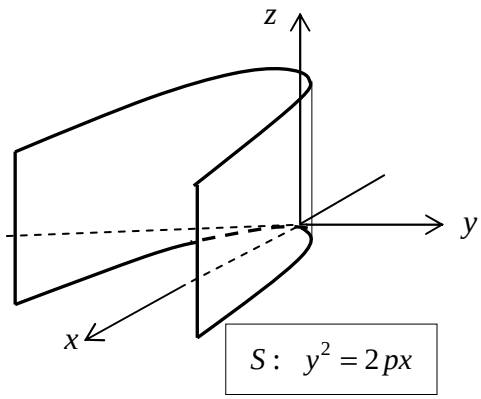

Fig.16

Cone of the second order with an apex in the beginning of coordinate, which axis is Oz *axis* Oz $\frac{x^2}{a^2}+\frac{y^2}{b^2}-\frac{z^2}{c^2}=0$ (Fig. 17)

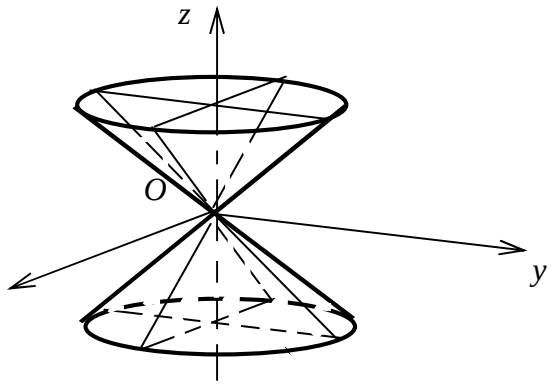

Fig.17

Analogically, $\frac{x^2}{a^2}-\frac{y^2}{b^2}+\frac{z^2}{c^2}=0$ – which axis is Oy axis,

$-\frac{x^2}{a^2}+\frac{y^2}{b^2}+\frac{z^2}{c^2}=0$ – which axis is Ox axis.

Surfaces of rotation. If a curve, lying in the plane yOz $F(y,z)=0$, $x=0$ rotates around Oz axis, then the plane equation is presented as follows:

$$F(\sqrt{x^2+y^2},z)=0.$$

Analogically the equation $F(x,\sqrt{y^2+z^2})=0$ defines the surface made by the rotation around Ox axis of the curve $F(x,y)=0$, $z=0$; equation $F(\sqrt{x^2+z^2},y)=0$ – is a surface, made by rotation of the curve $F(x,y)=0$, $z=0$ around Oy axis.

Equations of rotation surfaces made by rotation of ellipse, hyperbola, parabola around their symmetry axes are presented as follows.

Ellipsoid of rotation: $\frac{x^2+y^2}{a^2}+\frac{z^2}{c^2}=1$, rotation axis Oz, when $a=c$ then ellipsoid transfers into a sphere of a radius.

Single – sheet hyperboloid of rotation: $\frac{x^2+y^2}{a^2}-\frac{z^2}{c^2}=1$, rotation axis Oz –

is an imaginary surface.

Two – sheeted hyperboloid of rotation: $\frac{x^2+y^2}{a^2}-\frac{z^2}{c^2}=-1$, rotation axis Oz – is a real hyperboloid axis.

Paraboloid of rotation: $x^2+y^2=2pz$, Oz rotation axis.

Rotation surfaces are isolated case of the surfaces of the second order.

Ellipsoid (three - axes) $\frac{x^2}{a^2}+\frac{y^2}{b^2}+\frac{z^2}{c^2}=1$ (Fig. 18)

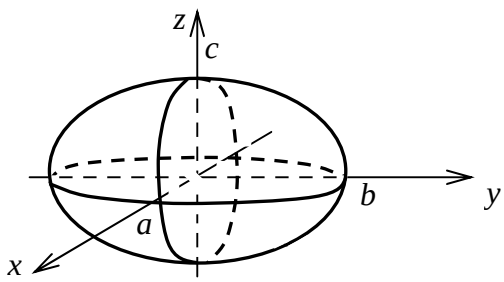

Fig.18

One – sheet hyperboloid $\frac{x^2}{a^2}+\frac{y^2}{b^2}-\frac{z^2}{c^2}=1$ (Fig. 19)

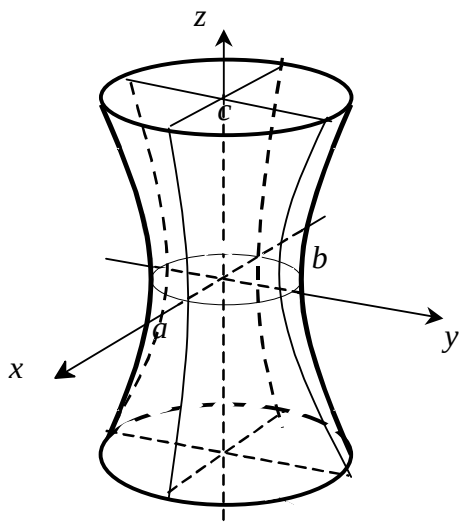

Fig.19

Two – sheeted hyperboloid $\frac{x^2}{a^2}+\frac{y^2}{b^2}-\frac{z^2}{c^2}=-1$ (Fig. 20)

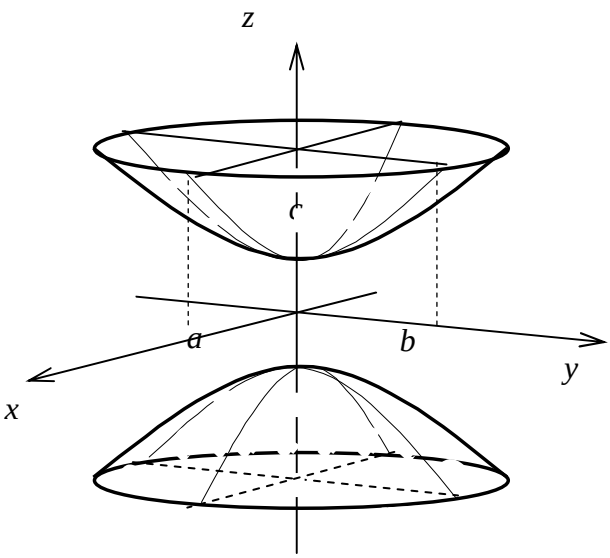

Fig.20

Elliptic paraboloid $\frac{x^2}{p}+\frac{y^2}{q}=2z \quad (p>0,\ \ q>0)$ (Fig. 21)

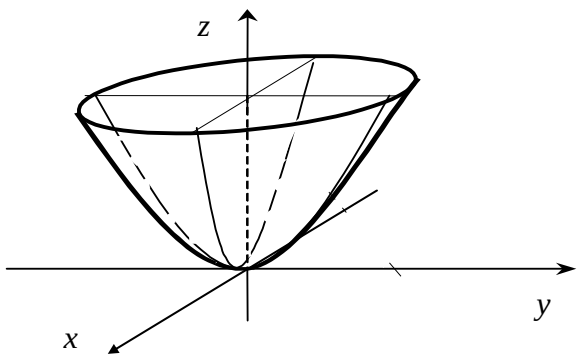

Fig.21

There is another surface of the second order – it is a hyperbolic paraboloid, which equation is: $\frac{x^2}{p}-\frac{y^2}{q}=2z \quad (p>0,\ \ q>0)$ (Fig. 22)

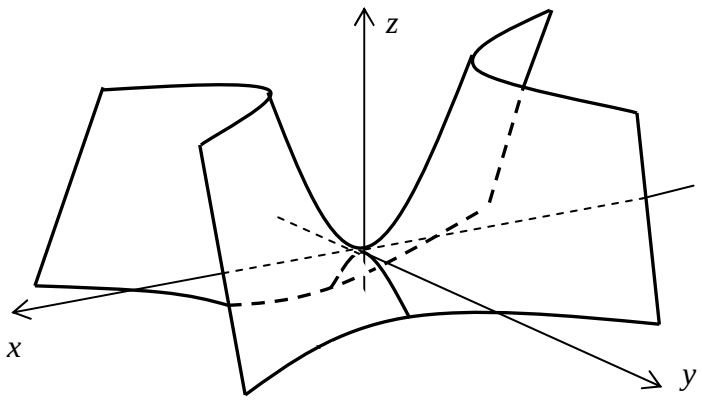

Fig.22

Thus there are nine surfaces of the second order: three cylinders – elliptic, hyperbolic, parabolic a cone of the second order, ellipsoid, one – sheet hyperboloid, two – sheeted hyperboloid, elliptic paraboloid and hyperbolic paraboloid.

Common equation of the second order surface is presented as follows:

$$Ax^2 + By^2 + Cz^2 + 2Dyz + 2Exz + 2Fxy + 2Gx + 2Hy + 2Kz + L = 0.$$

Besides the pointed out planes this equation can define the aggregation of two planes a point, a straight line or an imaginary surface, i.d. it can not have a geometric meaning.

The research of the common equation of the second order out of the frames of the given course-book.

Home task

1. Calculate the plane equation, going through the point $M(1;-1;2)$ is parallel to the plane $x-2y+3z-5=0$.
2. Make up an equation, going through the point $M(3;2;1)$ and cutting the congruous intercepts on the coordinate axes.
3. Make up a plane equation going through the line of plane intersection $x+2y+4z-5=0$ и $2x-y-z+6=0$ and parallel to Oz axis.
4. To calculate an angle between the planes, going through the point $M(2;-2;-2)$, one of which is going through Ox axis, and another one – through Oz axis.
5. To calculate an angle between vector $\vec{s}=\vec{i}+2\vec{j}+\vec{k}$ and plane $x+y+2z-3=0$.

6. Make up an equation, going through point $M(1;2;3)$ and perpendicular to vectors $\vec{s}_1 = \vec{i} + 2\vec{j} + 3\vec{k}$ and $\vec{s}_2 = 2\vec{i} + 3\vec{j} + \vec{k}$.
7. To calculate the distance between parallel straight lines $\frac{x}{1} = \frac{y-2}{2} = \frac{z-3}{1}$ and $\frac{x-2}{1} = \frac{y+2}{2} = \frac{z-1}{1}$.
8. To calculate an angle between the straight lines $\begin{cases} 3x - 2y + 16 = 0 \\ 3x - z = 0 \end{cases}$ and $\begin{cases} 4x - y - z + 12 = 0 \\ y - z - 2 = 0 \end{cases}$.
9. Points are given $A(2;2;2)$, $B(4;6;6)$, $C(6;6;4)$. To make up a straight line equation, going through A point and perpendicular to $\overrightarrow{AB}$ and $\overrightarrow{AC}$.
10. To find parametric straight line equation, going through the points $A(1;-3;2)$ and $B(-2;1;2)$.

9. FUNCTIONS OF SEVERAL INDEPENDENT VARIABLES

9.1. Function Definition Domain. Lines and Surfaces of the Level

Let's consider two nonempty sets D and U. If each pair x, y elements of D set according to a certain rule the only one element z among the set U is put, then one says that on the set D there is a mapping or a function is assigned with the set D of U values

$$f : D \to U \text{ or } D \xrightarrow{f} U$$

D − is the domain of a function; U − is the domain of function values.

The domain of a function can be represented as the whole plane domain XOY or as its part including the boundary or not.

The domain of a function is defined according to the general mathematic requirements: the expression under the root in an even degree must be not negative under the sign of logarithm it must be positive the denominator of the fraction is not equal to zero etc.

The level line of the function $z = f(x,y)$ is a line in the plane domain XOY the function values are constant $f(x,y) = C$. As the example you can consider the lines of the equal heights on the geographical map.

The level surface of the function $U = f(x,y,z)$ is a surface $C = f(x,y,z)$, where the function values are constant.

Example. Define the domain of a function $z = \sqrt{R^2 - x^2 - y^2}$.

Solution. $R^2 - x^2 - y^2 \geq 0$; $x^2 + y^2 \leq R^2$

is a circle of the radius R including the boundary (Fig.23).

Example. Define the domain of a function $z = ln\left(R^2 - x^2 - y^2\right)$.

Solution. $R^2 - x^2 - y^2 > 0$; $x^2 + y^2 < R^2$

This is an internal part of the circle of the radius R (Fig.24.)

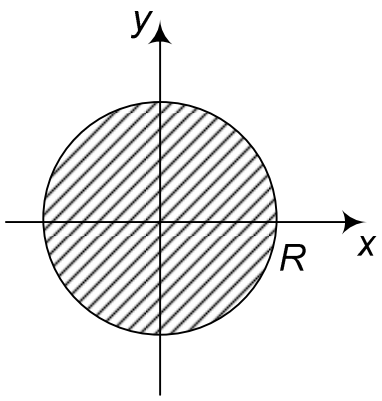

Fig. 23

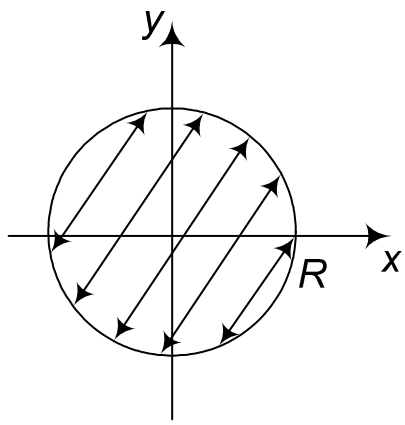

Fig. 24

Example. Calculate the domain of a function $z = arcsin(x - y)$.

Solution. The domain of a function $arcsin:$ $[-1;1]$.

Then $-1 \leq x - y \leq 1$; $x - y \leq 1$; $y \geq x - 1$; $x - y \geq -1$; $y \leq x + 1$ (Fig. 25).

Example. Calculate level lines of a function $z = x - y$.

Solution. $x - y = C$; $y = x - C$ (Fig.26).

At each of these lines a function value is consonant.

Example. Calculate level surfaces of a function $U = x^2 + y^2 + z^2$.

Solution. $C = x^2 + y^2 + z^2$, $C \geq 0$;

This is a system of concentric spheres with a radius $\sqrt{C}$.

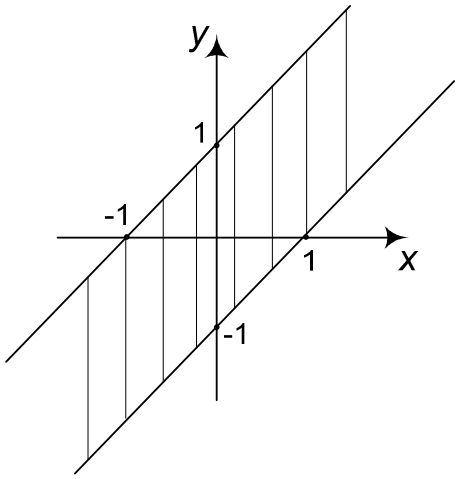

Fig. 25

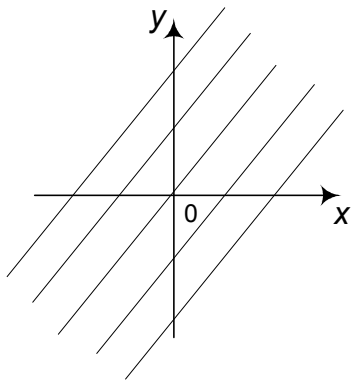

Fig. 26

9.2. Partial Derivatives of Functions of Several Independent Variables

A partial derivative of the function $z = f(x,y)$ with respect to the variable x is defined corresponding to the formula $\frac{\partial z}{\partial x} = \lim\limits_{\Delta x \to 0} \frac{f(x+\Delta x, y) - f(x,y)}{\Delta x}$, calculated at the consonant y. A partial derivative of the function a $z = f(x,y)$ with respect to the variable y is calculated by the formula $\frac{\partial z}{\partial y} = \lim\limits_{\Delta y \to 0} \frac{f(x, y+\Delta y) - f(x,y)}{\Delta y}$ and is calculated at conconant x.

Calculating partial variables you need to use the common formulae and rules of differentiating of the function with one independent variable.

Example. Calculate $\frac{\partial z}{\partial x}$ and $\frac{\partial z}{\partial y}$ if $z = arctg \frac{x^2+1}{y}$.

Solution. $\frac{\partial z}{\partial x} = \frac{1}{1+\left(\frac{x^2+1}{y}\right)^2} \cdot \frac{1}{y} \cdot 2x = \frac{2xy}{y^2\left(x^2+1\right)^2}$;

$$\frac{\partial z}{\partial y} = \frac{1}{1+\left(\frac{x^2+1}{y}\right)^2} \cdot \left(x^2+1\right)\left(-\frac{1}{y^2}\right) = -\frac{x^2+1}{y^2+\left(x^2+1\right)^2}.$$

Partial derivatives of the second order are partial derivatives obtained from the derivatives of the first order

$$\frac{\partial^2 z}{\partial x^2}=\frac{\partial}{\partial x}\left(\frac{\partial z}{\partial x}\right);\ \frac{\partial^2 z}{\partial y^2}=\frac{\partial}{\partial y}\left(\frac{\partial z}{\partial y}\right);$$

$$\frac{\partial^2 z}{\partial x\partial y}=\frac{\partial}{\partial y}\left(\frac{\partial z}{\partial x}\right);\ \frac{\partial^2 z}{\partial y\partial x}=\frac{\partial}{\partial x}\left(\frac{\partial z}{\partial y}\right).$$

The same way we can calculate partial variables at the higher orders.

If mixed partial variables are $\frac{\partial^2 z}{\partial y\partial x}$ and $\frac{\partial^2 z}{\partial y\partial x}$ continuous then they are equal.

Example. Show that $\frac{\partial^2 z}{\partial y\partial x}=\frac{\partial^2 z}{\partial y\partial x}$, if $z=\left(x^2+1\right)\left(y^3-1\right)$.

Solution. $\frac{\partial z}{\partial x}=\left(y^3-1\right)2x$; $\frac{\partial z}{\partial y}=3y^2\left(x^2+1\right)$;

$\frac{\partial^2 z}{\partial x\partial y}=2x\cdot 3y^2=6xy^2$; $\frac{\partial^2 z}{\partial y\partial x}=3y^2\cdot 2x=6xy^2$. Which was to be proved.

Example. Check if the function $z=ln\left(y^2-x^2\right)^x$ satisfies the equation

$$x\frac{\partial z}{\partial y}+y\frac{\partial z}{\partial x}=\frac{zy}{x}.$$

Solution. Let's transform the function $z=ln\left(y^2-x^2\right)^x=x\cdot ln\left(y^2-x^2\right)$.

$$\frac{\partial z}{\partial x}=1\cdot ln\left(y^2-x^2\right)+x\cdot\frac{(-2)x}{y^2-x^2}=ln\left(y^2-x^2\right)-\frac{-2x^2}{y^2-x^2};$$

$$\frac{\partial z}{\partial y}=\frac{x}{y^2-x^2}\cdot 2y=\frac{2xy}{y^2-x^2}.$$

Let's substitute in the equation

$$x\cdot\frac{2xy}{y^2-x^2}+y\,ln\left(y^2-x^2\right)-\frac{2x^2y}{y^2-x^2}=\frac{y}{\cancel{x}}\cdot\cancel{x}\,ln\left(y^2-x^2\right).$$

Which was to be proved.

For calculating derivatives of the complex functions let's use the following formulae.

Let $z=f(x,y)$, where $x=\varphi(t)$; $y=\psi(t)$ and $f(x,y)$, $\varphi(t)$, $\psi(t)$ have derivatives, then $\frac{dz}{dt}=\frac{\partial z}{\partial\varphi}\cdot\frac{\partial\varphi}{\partial t}+\frac{\partial z}{\partial\psi}\cdot\frac{\partial\psi}{\partial t}$.

If $z=f(x,y)$ and $y=\varphi(x)$, then $\frac{dz}{dx}=\frac{\partial z}{\partial x}+\frac{\partial z}{\partial y}\cdot\frac{\partial y}{\partial x}$.

If $z = f(x,y)$, where $x = \varphi(\xi,\eta)$; $y = \psi(\xi,\eta)$,

then $\frac{\partial z}{\partial \xi} = \frac{\partial z}{\partial x} \cdot \frac{\partial x}{\partial \xi} + \frac{\partial z}{\partial y} \cdot \frac{\partial y}{\partial \xi}$, $\frac{\partial z}{\partial \eta} = \frac{\partial z}{\partial x} \cdot \frac{\partial x}{\partial \eta} + \frac{\partial z}{\partial y} \cdot \frac{\partial y}{\partial \eta}$.

Using these formulae we can get formulae for derivative of implicit functions.

If $y = y(x)$ and $F(x,y) = 0$, then

$$\frac{\partial F}{\partial x} + \frac{\partial F}{\partial y} \cdot \frac{dy}{dx} = 0 \text{ and } y'_x = -\frac{\frac{\partial F}{\partial x}}{\frac{\partial F}{\partial y}}; \text{ in case if } \frac{\partial F}{\partial y} \neq 0.$$

If $z = \varphi(x,y)$ and $F(x,y,z) = 0$, then $\frac{\partial z}{\partial x} = -\frac{\frac{\partial F}{\partial x}}{\frac{\partial F}{\partial z}}$ and $\frac{\partial z}{\partial y} = -\frac{\frac{\partial F}{\partial y}}{\frac{\partial F}{\partial z}}$, $\frac{\partial F}{\partial z} \neq 0$.

Example. Calculate $\frac{dz}{dt}$, if $z = ln\left(x^2 + y^2\right)$, $x = r\,cos\,t$, $y = r\,sin\,t$.

Solution. $\frac{dz}{dt} = \frac{2x}{x^2 + y^2} \cdot r(-sin\,t) + \frac{2y}{x^2 + y^2} r\,cos\,t =$

$$= \frac{2r}{x^2 + y^2}(y\,cos\,t - x\,sin\,t) = \frac{2r(r\,sin\,t\,cos\,t - r\,cos\,t\,sin\,t)}{r^2\left(cos^2 t + sin^2 t\right)} =$$

$$= \frac{2\cancel{r^2}}{\cancel{r^2}}(sin\,t\,cos\,t - sin\,t\,cos\,t) = 0.$$

Example. Calculate a derivative $\frac{dy}{dx}$ of the function, assigned implicit $x^2 - cos\,y = y$.

Solution. $F(x,y) = x^2 - cos\,y - y = 0$; $\frac{dy}{dx} = -\frac{\frac{\partial F}{\partial x}}{\frac{\partial F}{\partial y}} = -\frac{2x}{sin\,y - 1} = \frac{2x}{1 - sin\,y}$.

9.3. Derivative with Respect to the Direction. Gradient of the function

The derivative of the function $z = f(x,y)$ at the point $M(x,y)$ direct towards vector $\vec{l} = \overrightarrow{MM}$ is called $\frac{\partial z}{\partial l} = \lim\limits_{|\overrightarrow{MM_1}| \to 0} \frac{f(M_1) - f(M)}{|\overrightarrow{MM_1}|} = \lim\limits_{\rho \to 0} \frac{\Delta z}{\rho}$, where $\rho = \sqrt{\Delta x^2 + \Delta y^2}$.

If $f(x,y)$ can be differentiable, then $\frac{\partial z}{\partial l} = \frac{\partial z}{\partial x} cos\alpha + \frac{\partial z}{\partial y} sin\alpha$, where α − is the angle made by the vector $\vec{l}$ with the OX axis. For the function $U = f(x,y,z)$. $\frac{\partial U}{\partial l} = \frac{\partial U}{\partial x} cos\alpha + \frac{\partial U}{\partial y} cos\beta + \frac{\partial U}{\partial z} cos\gamma$, where $cos\alpha$, $cos\beta$, $cos\gamma$ − directing cosines of the vector $\vec{l}$ $\left(cos^2\alpha + cos^2\beta + cos^2\gamma = 1\right)$.

The gradient of the function $U = f(x,y,z)$ at the point $M(x,y,z)$ is called a vector from the point M.

$$\overrightarrow{grad}U = \frac{\partial U}{\partial x}\vec{i} + \frac{\partial U}{\partial y}\vec{j} + \frac{\partial U}{\partial z}\vec{k}.$$

The gradient shows the direction of the fastest function height at the M point.

The derivative $\frac{\partial z}{\partial l}$ in the direction of the gradient has the greatest value

$$\left(\frac{\partial z}{\partial l}\right)_{the\ greatest} = \left|\overrightarrow{drad}z\right|.$$

Example. Find the derivative of the function $U = x^3y^2z$ at the point $M(1;1;1)$ in the direction of the vector $\overrightarrow{MM_1}$, where $M_1(3;2;3)$, the gradient and the module of the gradient at the M point.

Solution. Let's compose vector $\overrightarrow{MM_1}$ and define its directing cosines

$\overrightarrow{MM_1} = (3-1)\vec{i} + (2-1)\vec{j} + (3-1)\vec{k} = 2\vec{i} + \vec{j} + 2\vec{k}$ $\left|\overrightarrow{MM_1}\right| = \sqrt{2^2 + 1^2 + 2^2} = 3$.

$$cos\alpha = \frac{2}{3};\ cos\beta = \frac{1}{3};\ cos\gamma = \frac{2}{3}.$$

Let's calculate partial derivatives at the M point

$\frac{\partial U}{\partial x}=3x^2y^2z$; $\frac{\partial U}{\partial x}\Big|_M=3\cdot1\cdot1\cdot1=3$; $\frac{\partial U}{\partial y}=x^3 2yz$; $\frac{\partial U}{\partial y}\Big|_M=1\cdot2\cdot1\cdot1=2$;

$$\frac{\partial U}{\partial z}=x^3y^2;\ \frac{\partial U}{\partial z}\Big|_M=1\cdot1=1.$$

Then $\frac{\partial U}{\partial MM_1}=3\cdot\frac{2}{3}+2\cdot\frac{1}{3}+1\cdot\frac{2}{3}=\frac{10}{3}$; $\overrightarrow{grad}U_{/M}=3\vec{i}+2\vec{j}+\vec{k}$;

$\left|\overrightarrow{grad}U_{/M}\right|=\sqrt{3^2+2^2+1^2}=\sqrt{14}$.

Let's check, that $\left|\overrightarrow{grad}U_{/M}\right|\geq\frac{\partial U}{\partial MM_{1/M}}$: $\sqrt{14}\geq\frac{10}{3}$; $9\cdot14\geq100$; $126\geq100$,

which was to be proved.

9.4. Extremum of Function of two independent variables. The greatest and the least value of the function in the closed domain

The necessary condition in reaching an extremum of the function at the point $M_0(x_0,y_0)$ is an equality to zero of the first partial derivatives $\frac{\partial f(x_0y_0)}{\partial x}=0$; $\frac{\partial f(x_0y_0)}{\partial y}=0$. Such points are called stationary. Not any stationary point is a point of extremum, thus let's formulate sufficient conditions.

Let $M_0(x_0y_0)$ − is a stationary point.

Let's compose $\Delta=AC-B^2$, where

$$A=\frac{\partial f(x_0y_0)}{\partial x^2};\ C=\frac{\partial^2 f(x_0y_0)}{\partial y^2};\ B=\frac{\partial^2 f(x_0y_0)}{\partial x\partial y}$$

Then if $\Delta\begin{cases}>0,\ \textit{there is extremum}\begin{cases}max, A<0, (C<0)\\ min, A>0, (C>0)\end{cases}\\ <0,\ \textit{there is not extremum}\\ =0,\ \textit{to futher function investigation is required}\end{cases}$

Example. Calculate an extremum of the function $z=xy^2(1+x-y)$.

Solution. Let's find stationary points

$z=xy^2+x^2y^2-xy^3$; $\frac{\partial z}{\partial x}=y^2+2xy^2-y^3=y^2(1+2x-y)=0$

$$\frac{\partial z}{\partial y}=2xy+2x^2y-3xy^2=xy\left(2+2x-3y\right)=0$$

$$M_1\left(0;0\right);\ M_2:\begin{cases}2x-y=-1\\2x-3y=-2\end{cases}\quad M_2\left(-\frac{1}{4};\frac{1}{2}\right).$$

System $\begin{cases}\dfrac{\partial z}{\partial x}=0\\[2mm]\dfrac{\partial z}{\partial y}=0\end{cases}$ will have solution if $y=0$ at any x.

Let's get to this fact composing Δ.

$$A=\frac{\partial^2 z}{\partial x^2}=2y^2;\qquad A_{M_1}=0;\qquad A_{M_2}=\frac{1}{2};$$

$$B=\frac{\partial^2 z}{\partial x\partial y}=2y+4xy-3y^2;\qquad B_{M_1}=0;\qquad B_{M_2}=-\frac{1}{4};$$

$$C=\frac{\partial^2 z}{\partial y^2}=2x+2x^2-6xy;\qquad C_{M_1}=0;\qquad C_{M_2}=\frac{3}{8}.$$

If $y=0$, then $A=B=C=0$ and Δ can be not considered. Thus $\Delta_{M_1}=0$ − a futher investigation is required (a questionable case) $\Delta_{M_2}=\frac{1}{2}\cdot\frac{3}{8}-\frac{1}{16}=\frac{1}{8}>0$, there is an extremum namely a minimum as $A>0\left(C>0\right)$

$$Z_{min}\left(-\frac{1}{4};\frac{1}{2}\right)=-\frac{1}{4}\cdot\frac{1}{4}\left(\frac{4}{4}-\frac{1}{4}-\frac{2}{4}\right)=-\frac{1}{64}.$$

For determination of the greatest and the least value of the function in the closed domain you need: 1) to find stationary points inside the domain and to calculate the value of the function at these points; 2) to determine the greatest and the least value of the function on the boundaries of the domain including angle points; 3) to choose the greatest and the least value among all.

Home task

To determine the domains of definition, level lines and surfaces of the functions

1. $z=\sqrt{y^2-x^2}$ 2. $z=\sqrt{cos\left(x^2+y^2\right)}$ 3. $u=x+y+z$.

To check if the given functions satisfy the given equations

1. $x\dfrac{\partial u}{\partial x}+y\dfrac{\partial u}{\partial y}=2u$ 2. $\dfrac{\partial^2 u}{\partial x\partial y}=0$ 3. $\dfrac{\partial^2 U}{\partial x^2}=\dfrac{\partial^2 U}{\partial y^2}$

where $u=\frac{xy}{x+y}$ where $u=arctg\frac{x+y}{1-xy}$ where $U=ln\left(x^2-y^2\right)$

To calculate the extremums of the functions:

1. $z=xy(10-x-y)$ 2. $z=(x-2)^2+y^2+2$ 3. $z=x^3+y^3-3xy+1$

10. THE SIMPLE DIFFERENTIAL EQUATIONS

10.1. Differential equations of the 1st order

Ordinary differential equations are equations connecting an independent variable, a function and its derivatives.

The order of the highest derivative is an order of the differential equation.

We can present a differential equation of the 1st order as follows:

$$F(x,y,y')=0 \text{ or } y'=f(x,y)$$

A solution of the differential equation is any function which while its substitution turns it into an identity.

The process of finding a solution is called an integration so the general solution is presented as $y=\varphi(x,C)$.

Any solution of $y=\varphi(x,C_0)$, obtained at a certain value $C=C_0$ is called a particular solution.

The value C_0 comes out of the initial conditions $y_0=y(x_0)$.

If it is required to find a particular solution of the differential equation $y'=f(x,y)$, satisfying the initial condition $y_0=y(x_0)$ it is called Cauchy's problem solution.

Differential Equations with separable variables are presented as follows: $y'=\frac{f_1(x)\varphi_1(y)}{f_2(x)\varphi_2(y)}$ or taking into account that $y'=\frac{dy}{dx}$, $\frac{dy}{dx}=\frac{f_1(x)\varphi_1(y)}{f_2(x)\varphi_2(y)}$.

Let's fix dy and its functions depending on y on one side of the equality dx and its functions depending on X on the other side i.d. let's divide the variables

$$\frac{\varphi_2(y)}{\varphi_1(y)}dy = \frac{f_1(x)}{f_2(x)}dx,$$

if $f_1(x)$, $f_2(x)$, $\varphi_1(y)$, $\varphi_2(y)$ are not equal identically to zero.

Integrating this equality we are obtaining the general solution or the general integral

$$\int \frac{\varphi_2(y)}{\varphi_1(y)}dy - \int \frac{f_1(x)}{f_2(x)}dx = C.$$

Example. Find the general solution of the equation $y' = \frac{y\cos x}{\ln y}$.

Solution. $\frac{dy}{dx} = \frac{y\cos x}{\ln y}$; $\frac{\ln y}{y}dy = \cos x dx$

$\int \ln y \frac{1}{y}dy = \int \cos x$; $\frac{1}{y}dy = d\ln y$, then

$\int \ln y d\ln y = \int \cos x$; $\frac{\ln^2 y}{2} = \sin x + C$.

Example. Find the particular solution of the equation $y' = e^{x+y}$, satisfying the initial condition $y(0) = 0$.

Solution. $\frac{dy}{dx} = e^x \cdot e^y$; $\frac{dy}{e^y} = e^x dx$.

$\int e^{-y}dy = \int e^x dx$; $-e^{-y} = e^x + C$.

For finding C let's use the initial condition $-e^0 = e^0 + C$; $C = -2$;

$e^x + e^{-y} = 2$; $\frac{1}{e^y} = 2 - e^x$; $e^y = \frac{1}{2 - e^x}$;

$\ln e^y = \ln \frac{1}{|2 - e^x|}$; $y = -\ln|2 - e^x|$.

<u>Homogenous Differential Equations</u> are presented as $P(x,y)dx + Q(x,y)dy = 0$, where $P(x,y)$ and $Q(x,y)$ are homogenous functions of the same measurement. Function $f(x,y)$ is called a homogenous function of the *k*-th power if $f(\lambda x, \lambda y) = \lambda^k f(x,y)$, where λ − is a number.

The measurement of the *k*-th power presented as an aggregated parameter of x and y power in every summand of the function.

We can calculate a homogenous differential equation with the help of substitution $y = tx$. In this case $dy = tdx + xdt$, and this leads to the differential equation with separable variables.

Example. $(x+y)dx + (y-x)dy = 0$. Find the general solution.

Solution. $y = tx$; $dy = tdx + xdt$;

$(x+tx)dx + (tx-x)(tdx+xdt) = 0$;

$xdx + \cancel{txdx} + t^2xdx + tx^2dt - \cancel{xtdx} - x^2dt = 0$;

$x(1+t^2)dx = x^2(1-t)dt$;

$\int \frac{1}{x}dx = \int \frac{1-t}{1+t^2}dt = \int \frac{dt}{1+t^2} - \frac{1}{2}\int \frac{2tdt}{1+t^2}$;

$ln\,x = arctgt - \frac{1}{2}ln(1+t^2) + C$; $t = \frac{y}{x}$;

$ln\,x = arctg\frac{y}{x} - \frac{1}{2}ln\left(1+\frac{y^2}{x^2}\right) + C$.

The homogenous differential equations can be presented as $y' = f\left(\frac{y}{x}\right)$, that are called the differential equations with the homogenous right part. They can be solved with the same substitution $y = tx$.

Then $y' = t'x + t$.

Example. Solve the Cauchy's problem preliminary transforming the equation into $y' = f\left(\frac{y}{x}\right)$

$(xy + 4x^2 + y^2)dx - x^2dy = 0$

$y(1) = 2$

Solution. Let's divide an equation into x^2dx.

$$\frac{xy+4x^2+y^2}{x^2}=\frac{dy}{dx};\ y'=\frac{y}{x}+4+\left(\frac{y}{x}\right)^2;\ y=tx;$$

$y'=t'x+t$. $\frac{y}{x}=t$. Then

$$t'x+\cancel{t}=4+\cancel{t}+t^2;\ \frac{dt}{dx}\cdot x=t^2+4;$$

Let's divide variable $\int\frac{dx}{x}=\int\frac{dt}{t^2+2^2}$ and let's integrate

$$ln\,x=\frac{1}{2}arctg\frac{t}{2}+C;\ t=\frac{y}{x};$$

$ln\,x=\frac{1}{2}arctg\frac{y}{2x}+C$; This is general solution of the initial conditions. Let's find C and then the partial solution

$$ln1=\frac{1}{2}arctg\frac{2}{2\cdot 1}+C;\ 0=\frac{1}{2}\cdot\frac{\pi}{4}+C;\ C=-\frac{\pi}{8};$$

$$arctg\frac{y}{2x}=2ln|x|+\frac{\pi}{4}.$$

<u>Linear Differential Equations</u> are presented as $y'+P(x)y=Q(x)$.

In this case y and y' contain the equation in the first power not multiplying.

Bernoulli's Equation (non-linear) is presented as $y'+P(x)y=Q(x)y^m$; $(m\neq 0;1)$.

It can be transformed into the linear with the help of the substitution $z=y^{1-m}$.

Then $\frac{1}{1-m}z'+P(x)z=Q(x)$.

Such differential equations can be solved by the method of random constant variation or by Bernoulli's method.

Let's consider Bernoulli's Method.

If $y=U\cdot V$, where $U=U(x)$; $V=V(x)$.

Then we will obtain $U'V + UV' + P(x)U \cdot V = Q(x)$ from $y' + P(x)y = Q(x)$.

Let's group the second and the third summand

$$U'V + U\left[V' + P(x)V\right] = Q(x)$$

Let's find such $V(x)$ function where a square bracket will vanish. But $U(x)$ function will stay random. This is a differential equation with separable variables $V' + P(x)V = 0$; $\frac{dV}{dx} = -P(x)V$; $\frac{dV}{V} = -P(x)dx$

$lnV = -\int P(x)dx + \underset{0}{\cancel{C}}$. Let $C = 0$ as it is sufficient for any particular solution transforming a square bracket into zero.

Thus $V = e^{-\int p(x)dx}$. Then $\frac{dU}{dx}e^{-\int p(x)dx} = Q(x)$; $du = e^{\int p(x)dx} \cdot Q(x)dx$.

This is also a differential equation with separable variables

$$U = \int Q(x)e^{\int p(x)dx}dx + C$$

Then $y = U \cdot V = \left[\int Q(x)e^{\int p(x)dx}dx\right]e^{-\int p(x)dx}$.

Let's apply the obtained knowledge in practice.

Example. Solve an equation $y' - \frac{1}{x}y = x^3$.

Solution. This is a linear differential equation. Let's apply Bernoulli's method.

$$y = UV;\ y' = U'V + UV';$$

$$U'V + UV' - \frac{1}{x}U \cdot V = x^3;$$

$$U'V + U\left[V' - \frac{1}{x}V\right] = x^3;$$

$$V' - \frac{1}{x}V = 0;\ \frac{dV}{dx} = \frac{V}{x};\ \int\frac{dV}{V} = \int\frac{dx}{x};$$

$$lnV = ln\,x + \cancel{C} \Rightarrow V = x$$

$$\frac{dU}{dx}\cdot x + U\cdot 0 = x^3;\ \int dU = \int x^2 dx;\ U = \frac{x^3}{3} + C$$

Then $y = U\cdot V = x\left(\frac{x^3}{3} + C\right)$ − is a general solution.

Example. Find a particular solution of the equation $(x-2)y' - y = y^2$ at the initial conditions $y(4) = 1$.

Solution. This Bernoulli's equation is easier to present as follows:

$$y' - \frac{1}{x-2}y = \frac{y^2}{x-2}.$$

Let's apply Bernoulli's method: $y = UV$; $y' = U'V + UV'$.

Then $U'V + UV' - \frac{1}{x-2}U\cdot V = \frac{U^2V^2}{x-2}$

$$U'V + U\left[V' - \frac{V}{x-2}\right] = \frac{U^2V^2}{x-2}.$$

$$\frac{dV}{dx} = \frac{V}{x-2};\ \frac{dV}{V} = \frac{dx}{x-2};\ ln|V| = ln|x-2|;\quad V = x-2$$

then $\frac{dU}{dx}(x-2) = \frac{U^2(x-2)^2}{(x-2)}$;

$$\int U^{-2}dU = \int dx;\ -\frac{1}{U} = x + C;\ U = -\frac{1}{x+C};\quad y = UV = -\frac{x-2}{x+C}.$$

Let's find C. $1 = -\frac{4-2}{4+C}$; $\quad 4 + C = -2$; $C = -6$. Then $y = \frac{2-x}{x-6}$;

Sometimes for defining the type of the differential equation and therefore for solving method choice it's sensible to consider x as a function of y, i.d. $x = x(y)$.

Example. $y'(x + y^2) = y$.

Solution. In the given type it's impossible to define a type of the differential equation.

If $x = x(y)$ taking into account that $y'_x = \frac{dy}{dx} = \frac{1}{\frac{dx}{dy}} = \frac{1}{x'_y}$. Then

$$\frac{1}{x'}\left(x + y^2\right) = y;\ yx' = x + y^2;\ x' - \frac{1}{y}x = y$$

Now it is presented as $x' + P(y)x = Q(y)$

This is a linear differential equation relatively to x and x'.

Let's use Bernoulli's method $x = U \cdot V$, where $U = U(y)$; $V = V(y)$.

$x' = U'V + UV'$. $\quad U'V + UV' - \frac{1}{y}U \cdot V = y$;

$U'V + U\left[V' - \frac{1}{y}V\right] = y$; $\frac{dV}{dy} - \frac{1}{y}V = 0$; $\int \frac{dV}{V} = \int \frac{dy}{y}$ $\quad V = y$;

Then $\frac{dU}{dy} \cdot y = y$; $\int dU = \int dy$;

$U = y + C$; $\quad x = U \cdot V = y(y + C)$.

Differential equation of higher orders (reducible to the first order)

Let's consider the following types of equations

a) $y^{(n)} = f(x)$

b) $F\left(x, y^{(k)}, y^{(k+1)}, ..., y^{(n)}\right) = 0$, not containing a selecting function

c) $F\left(y, y', ..., y^{(n)}\right) = 0$, not containing an independent variable.

a) $y^{(n)} = f(x)$. Such equation is solved by the nth order integration.

Example. $y''' = \sin x$. Solve a differential equation at the initial conditions

$y(0) = 0$; $y'(0) = 1$; $y''(0) = 2$.

Solution. $y''' = \frac{d}{dx}(y'') = \sin x$.

This is a differential equation with separable variables for y''

$$\int d\left(y''\right)=\int sin\,xdx;\ y''=-cos\,x+C_1$$

$$y''=\frac{d}{dx}\left(y'\right)=-cos\,x+C\,.$$

This is differential equation with separable variables for y'

$\int d\left(y'\right)=\int\left(-cos\,x+C_1\right)dx;\qquad y'=-sin\,x+C_1x+C_2\,.$

Then $\int dy=\int\left(-sin\,x+C_1x+C_2\right)dx$

$y=cos\,x+C_1\dfrac{x^2}{2}+C_2x+C_3.$

For finding C_1, C_2, C_3 let's use the initial condition

$y\left(0\right)=0;\ 0=cos\,0+C_1\cdot 0+C_2\cdot 0+C_3;\ C_3=-1;$

$y'\left(0\right)=1;\ 1=-0+C_1 0+C_2;\ C_2=1;$

$y''\left(0\right)=2;\ 2=-cos\,0+C_1;\ C_1=3$

Then the particular solution is presented as

$$y=cos\,x+\frac{3}{2}x^2+x-1.$$

b) $F\left(x,y^{(k)},y^{(k+1)},...,y^{(n)}\right)=0\,.$

The order of such equation can be reduced if to take the lowest derivative as an unknown function, i.d. $z=y^{(k)}$. As a result we will obtain an equation as follows: $F\left(x,z,z',...,z^{(n-k)}\right)=0\,.$

The order of the equation will be reduced for k-units.

Example. Find the general solution of the equation $y''=\dfrac{y'}{x}+1.$

Solution. If $y'=z$. Then $y''=z'$. We will obtain $z'=\dfrac{z}{x}+1.$

This is a differential equation presented as $z'=f\left(\dfrac{z}{x}\right)$. Let's make a

substitution $z = tx$; $z' = t'x + t$. Let's substitute $t'x + \cancel{t} = \cancel{t} + 1$; $\frac{dt}{dx} = \frac{1}{x}$; $dt = \frac{dx}{x}$

$\int dt = \int \frac{dx}{x}$; $t = ln\,x + C_1$; $\frac{z}{x} = ln\,x + C_1$

$z = x\,ln\,x + C_1 x$; $y'\,x\,ln\,x + C_1 x$.

Let's divide the variables $dy = \left(x\,ln\,x + C_1 x\right)dx$

$y = \int x\,ln\,x dx + C_1 \int x dx$.

Let's integrate them into parts

$$\left| \begin{array}{l} ln\,x = U \\ xdx = dV \\ dU = \frac{1}{x}dx \\ V = \frac{x^2}{2} \end{array} \right|.$$

Then $y = \frac{x^2}{2} ln\,x - \int \frac{x^2}{2} \cdot \frac{1}{x} dx + C_1 \int x dx = \frac{x^2}{2} ln\,x - \frac{x^2}{4} + C_1 \frac{x^2}{4} + C_2$.

c) $F\left(y, y', ..., y^{(n)}\right) = 0$. This equation doesn't contain an independent variable.

If to take a selecting function as an independent variable. Then $y' = z$; $y'' = z \cdot z'$. In this case we use the rule of differential of the complex function $y'' = \frac{dz}{dy} \cdot \frac{dy}{dx} = z' \cdot z$

$$y''' = z\left[z\frac{d^2 z}{dy^2} + \left(\frac{dz}{dy}\right)^2 \right] = z\left[zz'' + \left(z'\right)^2 \right]$$

Here the order will be reduced for one unit.

Example. Find the particular solution of the equation $yy'' = \left(y'\right)^2$; $y(0) = 1$; $y(0) = 2$.

Solution. Let's make a substitution of $y' = z$. Then $y'' = z'z$. We will obtain

$yz'z = z^2$ or $y\dfrac{dz}{dy} = z$.

Let's divide the variable and integrate

$$\frac{dz}{z} = \frac{dy}{y}; \quad \int\frac{dz}{z} = \int\frac{dy}{y};$$

$ln\,z = ln\,y + ln\,C_1$.

In this case it will be easier to present a random constant as a logarithm.

Then $z = C_1 y$ or $\dfrac{dy}{dx} = C_1 y$. Let's divide the variables and integrate

$$\frac{dy}{y} = C_1 dx; \ \int\frac{dy}{y} = \int C_1 dx; \ ln\,y = C_1 x + C_2$$

$$y = e^{C_1 x + C_2}$$

Using the initial condition, let's find C_1 and C_2 $\quad y = e^{C_1 x + C_2}; \quad y(0) = 1;$

$$y' = C_1 e^{C_1 x + C_2};$$

$y'(0) = 2;$

$1 = e^{C_1 \cdot 0 + C_2}; \quad e^{C_2} = 1; \qquad C_2 = 0; \qquad 2 = C_1\ e^{C_1 \cdot 0}; \ C_1 = 2$

The particular solution $y = e^{2x}$.

10.3. Linear differential equation of the second order with constant coefficients

The equation like $a_0 y'' + a_1 y' + a_2 y = f(x)$, where a_0, a_1, a_2 − are real numbers and y, y', y'' that are of the first order not multiplying are called linear inhomogeneous differential equation with constant coefficients (LIDE). But if the right part is equal to zero $f(x) = 0$, then they are linear homogeneous ones (LHDE). The structure of LIDE general solution is as follows: $y = y_0 + \overline{y}$, where y_0 a general solution of LHDE, $\overline{y}$ a particular solution of LIDE. The general solution of LHDE (y_0) depends on the kinds of roots of the characteristic equation

$a_0k^2 + a_1k + a_2 = 0$, where a degree of k number corresponds to the order of derivative. We find roots according to the formula $k_{12} = \dfrac{-a_1 \pm \sqrt{a_1^2 - 4a_0a_2}}{2a_0}$

a) in the general solution to every simple real k root there is a corresponding summand like Ce^{kx}, i.d.

$$y_0 = C_1e^{k_1x} + C_2e^{k_2x}$$

b) to every multiple real root like $k_1 = k_2 = k$ there is a corresponding summand like $(C_1 + xC_2)e^{kx}$, i.d. $y_0 = (C_1 + xC_2)e^{kx}$.

c) to every couple of complex-conjugate roots like $k = \alpha \pm i\beta$ there is a summand like $e^{\alpha x}(C_1 \cos\beta x + C_2 \sin\beta x)$, i.d. $y_0 = e^{\alpha x}(C_1 \cos\beta x + C_2 \sin\beta x)$.

Example. Find a general solution of LHDE $y'' - y' - 2y = 0$.

Solution. Let's make up a characteristic equation $k^2 - k - 2 = 0$.

$k_{12} = \dfrac{1 \pm \sqrt{1+18}}{2} = \dfrac{1 \pm 3}{2} = \begin{cases} 2 \\ -1 \end{cases}$, then $y_0 = C_1e^{2x} + C_2e^{-x}$.

Example. Find a general solution of LHDE $y'' - 6y' + 9y = 0$.

Solution. Let's make up a characteristic equation like $k^2 - 6k + 9 = 0$. This is a whole square: $(k_1 - 3)^2 = 0$; $k_1 = k_2 = 3$. Then $y_0 = (C_1 + xC_2)e^{3x}$.

Example. Find a general solution of LHDE $y'' + 2y' + 2y = 0$.

Solution. Let's make up a characteristic equation like $k^2 + 2k + 2 = 0$

$k_{12} = \dfrac{-2 \pm \sqrt{4-8}}{2} = \dfrac{-2 \pm 2\sqrt{-1}}{2} = -1 \pm i$.

Then $y_0 = e^{-x}(C_1 \cos x + C_2 \sin x)$.

Example. Find a particular solution of LHDE $y'' + y' - 2y = 0$, satisfying the initial condition $y(0) = 0$; $y'(0) = 3$.

Solution. Let's make a characteristic equation like $k^2+k-2=0$; $k_{12}=\frac{-1\pm 3}{2}=\begin{cases}1\\-2\end{cases}$

$$\begin{array}{l} y_0=C_1e^x+C_2e^{-2x}; \\ y_0'=C_1e^x-2C_2e^{-2x}; \end{array} \begin{cases}0=C_1+C_2; \quad C_2=-C_1; \\ 3=C_1-2C_2; \; C_1=1\end{cases}$$

$C_2=-1$, then $y_0=e^x-e^{-2x}$

For finding a particular solution of LHDE we use a method of random constant variation and a method of inspection of a particular solution. Let's consider the method of inspection that is used in case if the right part is as follows: $f(x)=e^{\alpha x}\left(P_n(x)cos\,\beta x+Q_m(x)sin\,\beta x\right)$.

Let's find particular solution of $\overline{y}$ in the view

$$\overline{y}=x^r e^{\alpha x}\left(P_l(x)cos\,\beta x+Q_l(x)sin\,\beta x\right), \text{ where}$$

$l=max\{m,n\}$, i.d. $P_l(x)$, $Q_l(x)$ − are polynomial of the highest degree among those from the function $f(x)$; r a multiplicity the root $\alpha+i\beta$ in the characteristic equation.

If in the right part there is only $sin\,\beta x$ or $cos\,\beta x$, then in the particular solution there must be both $sin\,\beta x$ and $cos\,\beta x$ i.d. $\overline{y}$ presents $f(x)$ in the widest view and is multiplied for x^r.

Let's write the polynomials down with non-definite coefficients:

$$P_0(x)=A;\; P_1(x)=Ax+B;\; P_2(x)=Ax^2+Bx+C.$$

Let's put the found particular solution into the initial equation and define the non-definite coefficients, equating summands in the left and right parts of the equality at equal degrees x, $sin\,\beta x$, $cos\,\beta x$.

If the right part is like $f(x)=f_1(x)+f_2(x)$, then $\overline{y}=\overline{y}_1+\overline{y}_2$, every of which we will find according to the above described scheme.

Example. Find a general solution of the equation $y''+2y'+y=x^2$.

Solution. Let's make a characteristic equation for $y''+2y'+y=0$

$k^2+2k+1=0$; $\qquad (k+1)^2=0$; $k_1=k_2=-1$;

$y_0=(c_1+xC_2)e^{-x}$; $\qquad y=y_0+\overline{y}$.

$f(x)=x^2$. Here $\alpha=0$; $\beta=0$; $P_2(x)=1\cdot x^2+0x+0$.

$\alpha+\beta i=0+0i=0$ – is not a root of the characteristic equation. Then $\overline{y}=x^{\circ}e^{\circ x}\left[\left(Ax^2+Bx+C\right)cos\,0x+\left(Dx^2+Ex+F\right)sin\,0x\right]=$
$=Ax^2+Bx+C;$

Let's put $\overline{y}$ into the equation and equal the coefficient on the left and on the right at equal degrees of x.

1	$\overline{y}=Ax^2+Bx+C$
2	$\overline{y}'=2Ax+B$
1	$\overline{y}''=2A$

$$Ax^2+Bx+C+4Ax+2B+2A=1x^2+0x+0$$

$$\begin{array}{c|l} x^2 & A=1 \\ x & B+4A=0;\ \ B=-4 \\ x^{\circ} & C+2B+2A=0;\ \ C=-2A-2B=-2+8=6; \end{array}$$

then $\overline{y}=x^2-4x+6$ and a general solution is as follows: $y=y_0+\overline{y}=(C_1+xC_2)e^{-x}+x^2-4x+6$.

If the initial conditions are given, let's find C_1 and C_2.

Example. Find a particular solution of $y''+4y'+3y=e^{-x}$; $y(0)=0$; $y'(0)=1$.

Solution. Let's make up a characteristic equation for $y''+4y'+3y=0$.

$$k^2+4k+3=0;\ k_{1,2}=\frac{-4\pm 2}{2}=\begin{cases}-1\\-3\end{cases}$$

$y_0 = C_1 e^{-x} + C_2 e^{-3x}$, here $\alpha_1 = -1;\ \alpha_2 = -3$.

$\beta_1 = 0;\ \beta_2 = 0$.

For the right part $\alpha = -1;\ \beta = 0$.

Thus $\overline{y} = Axe^{-x}$. The degree of x is equal to one, as $\alpha = -1$ and it is a root of the characteristic equation of the multiplicity "one". Let's put $\overline{y}$ into the initial equation and equal the coefficients $\overline{y}$ at equal degrees on the left and on the right

3	$\overline{y} = Ax \cdot \overline{e}^{x}$
4	$\overline{y}' = Ae^{-x} - Axe^{-x}$
1	$\overline{y}'' = -Ae^{-x} - Ae^{-x} + Axe^{-x}$
	$3\cancel{Axe^{-x}} + 4Ae^{-x} - 4\cancel{Axe^{-x}} - 2Ae^{-x} + \cancel{Axe^{-x}} = 4e^{-x}$

$$2A = 4;\ A = 2$$

Then $y = y_0 + \overline{y} = C_1 e^{-x} + C_2 e^{-3x} + 2xe^{-x}$;

Let's find C_1 and C_2 from the initial conditions $y = C_1 e^{-x} + C_2 e^{-3x} + 2xe^{-x}$; $0 = C_1 + C_2$; $y' = -C_1 e^{-x} - 3C_2 e^{-3x} + 2e^{-x} - 2xe^{-x}$; $1 = -C_1 - 3C_2 + 2$

$$\begin{cases} C_1 = -C_2; \\ C_1 + 3C_2 = 1;\ \ 2C_2 = 1;\ \ C_2 = \dfrac{1}{2};\ \ C_1 = -\dfrac{1}{2}. \end{cases}$$

Answer: $y = -\dfrac{1}{2}e^{-x} + \dfrac{1}{2}e^{-3x} + 2xe^{-x}$;

Example. Solve a problem by Cauchy

$y'' + y = x\cos x$

$y(0) = 1$

$y'(0) = \dfrac{5}{4}$

Solution. Let's make up a characteristic equation for $y'' + y = 0$; $k^2 + 1 = 0$

$k^2 = -1$; $\quad k_{1,2} = \pm\sqrt{-1} = \pm i$; $\quad \alpha = 0$; $\quad \beta = 1$; $\quad y_0 = C_1 \cos x + C_2 \sin x$; $f(x) = x \cdot \cos x$ Thus in the particular solution there will be both cosines and sines:

$x = 0 + 1x$. Thus $\overline{y} = x^2\left[(Ax+B)\cos x + (Cx+D)\sin x\right]e^{0x}$.

For the right part $f(x) = x\cos x$; $\alpha = 0$; $\beta = 1$: $\alpha + \beta i = 0 + 1i$ is a root of multiplicity "one" of the characteristic equation, thus $r = 1$.

Then $\overline{y} = x\left[(Ax+B)\cos x + (Cx+D)\sin x\right]$.

Let's put $\overline{y}$ into the initial equation and equal the coefficients on the left and on the right at such summand

1	$\overline{y} = \left(Ax^2 + Bx\right)\cos x + \left(Cx^2 + Dx\right)\sin x$
0	$\overline{y}' = (2Ax+B)\cos x - \left(Ax^2+Bx\right)\sin x + (2Cx+D)\sin x + \left(Cx^2+Dx\right)\cos x$
1	$\overline{y}'' = 2A\cos x - (2Ax+B)\sin x - (2Ax+B)\sin x - \left(Ax^2+Bx\right)\cos x +$
	$+2C\sin x + (2C+D)\cos x + (2Cx+D)\cos x - \left(Cx^2+Dx\right)\sin x$

$\cos x$	x^2	$A - A = 0$
	x^1	$B - B + 2C + 2C = 1$; $4C = 1$; $C = \frac{1}{4}$;
	x^0	$2A + D + D = 0$; $A + D = 0$
$\sin x$	x^2	$C - C = 0$
	x^1	$D - 2A - 2A - D = 0$; $A = 0$;
	x^0	$-B - B + 2C = 0$; $-B + C = 0$

$A = 0$; $B = C = \frac{1}{4}$; $D = 0$; $\overline{y} = x\left(\frac{1}{4}\cos x + \frac{1}{4}x\sin x\right)$

Let's find C_1 and C_2 from the initial conditions

$$y = C_1\cos x + C_2\sin x + \frac{x}{4}\cos x + \frac{x^2}{4}\sin x$$

$$y' = -C_1\sin x + C_2\cos x + \frac{1}{4}\cos x - \frac{x}{4}\sin x + \frac{x}{2}\sin x + \frac{x^2}{4}\cos x$$

$$1 = C_1 + 0\cdot C_2 + 0 + 0;\ C_1 = 1;$$

$$\frac{5}{4} = -0 + C_2 + \frac{1}{4} - 0 + 0 + 0;\ C_2 = 1;$$

The solution of the problem by Cauchy $y = \cos x + \sin x + \frac{x}{4}\cos x + \frac{x^2}{4}\sin x$.

Home task

Solve equations

1. $yy'+\dfrac{x}{\sin y}=0$ 2. $y'=xe^{y}$.

3. $xydy-\left(y^2+2x^2\right)dx=0$.

4. $y'=\dfrac{y}{x}-\sin\dfrac{y}{x}$.

5. $y'-yctgx=\cos ecx$, $y\left(\dfrac{\pi}{2}\right)=0$.

6. $(y^4+2x)y'=y,\ \ y(1)=1$.

7. $y''=xe^{-x},\ \ y(0)=0,\ \ y'(0)=2$.

8. $2xy'''y'=(y')^2-4$.

9. $y'''=y'e^{y},\ \ y(0)=0,\ \ y'(0)=1$.

10. $y''-y=x\sin x$.

11. $y''+9y=\cos 3x,\ \ y(0)=y\left(\dfrac{\pi}{6}\right)=0$.

12. $y''-6y'+25y=\sin x$.

11. DOUBLE INTEGRALS

11.1. Double Integrals in the Cartesian Coordinate System

The double integral of the closed limited domain $D\in xoy$ is called a limit of the integral sums under the condition that the greatest diameter of the elementary domains tends to zero

$$\iint\limits_D f\left(x,y\right)d\sigma=\lim_{max\,d_k\to 0}\sum_{k=1}^{n} f\left(\xi_k,\eta_k\right)\Delta\sigma_k .$$

If $f\left(x,y\right)>0$, then the geometric meaning of the double integral is a volume of a solid limited by the surface $z=f\left(x,y\right)$ from above, by the cylindrical